BRITISH COLUMBIA

Ministry of Transportation & Infrastructure

Bridge Project

No. XXXXX

232nd ST. UNDERPASS NO. 01648 - IMPACT DAMAGE REPAIR

HIGHWAY 1

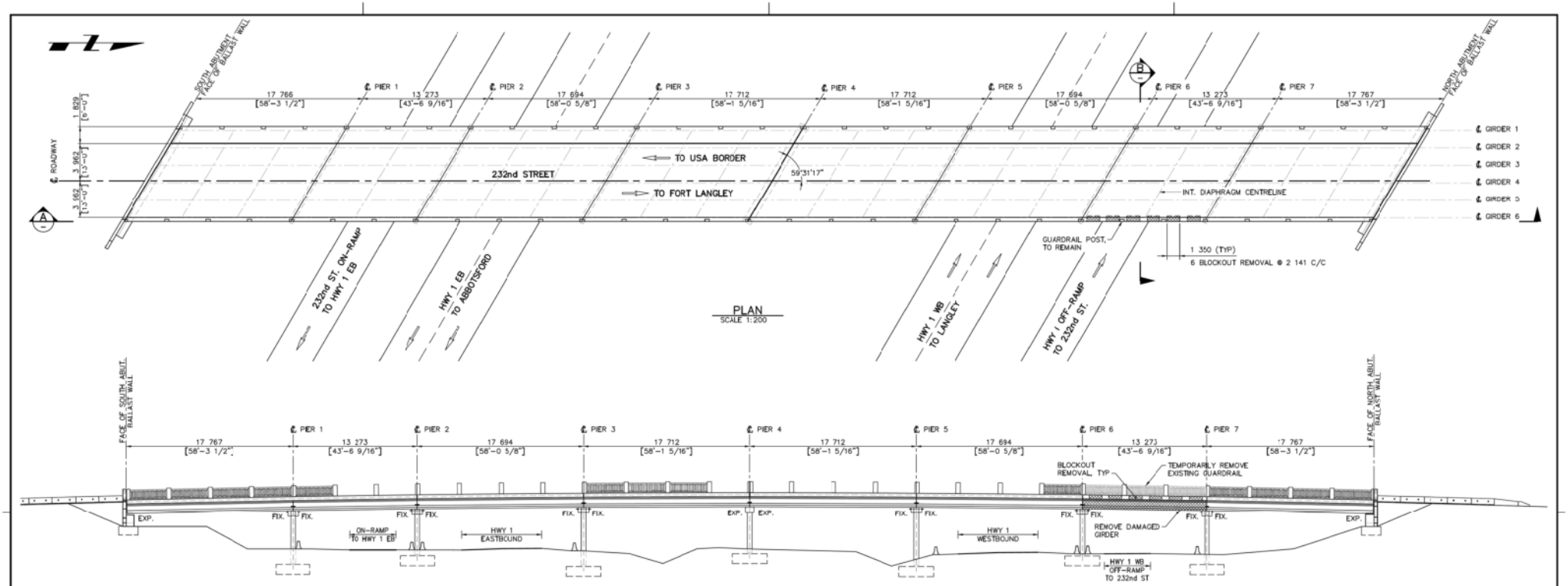

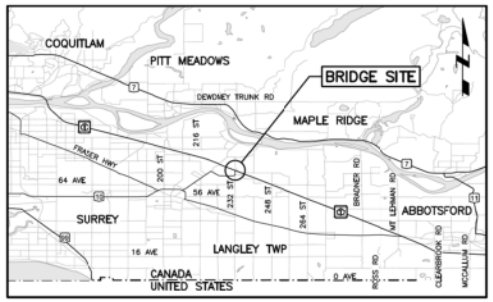

LOCATION PLAN
SCALE: NTS

REFERENCE DRAWING LIST	
DRAWING NO.	DRAWING TITLE
1648-3	LAYOUT, DOWEL PLAN AND KEY MAP
1648-4	ABUTMENTS
1648-5	PIERS
1648-6	PRESTRESSED CONCRETE STRINGERS
1648-7	BEARING ASSEMBLIES
1648-8	FLOOR PLATES
1648-9	GUTTERS AND DOWNPIPES
1648-10	DECK DETAILS

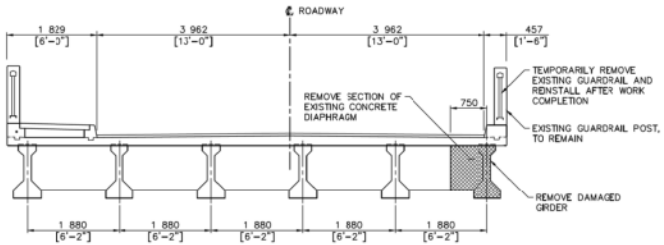

SECTION B
SCALE 1:50

(INTERMEDIATE DIAPHRAGM SHOWN, PIER DIAPHRAGM SIMILAR)

DRAWING LIST	
DRAWING NO.	DRAWING TITLE
01648-101	SITE PLAN
01648-102	GENERAL ARRANGEMENT
01648-103	GIRDER LAYOUT
01648-104	GIRDER DETAILS – SHEET 1
01648-105	GIRDER DETAILS – SHEET 2
01648-106	DECK DETAILS – SHEET 1
01648-107	DECK DETAILS – SHEET 2
01648-108	DECK DETAILS – SHEET 3

NOTES:

1. ALL DIMENSIONS ARE IN MILLIMETRES UNLESS NOTED OTHERWISE.
2. ALL DIMENSIONS SHOWN FOR THE EXISTING CONDITIONS AND COMPONENTS HAVE BEEN TAKEN FROM RECORD DRAWINGS AND SHALL BE CONFIRMED ON SITE BY THE CONTRACTOR.
3. THE CONTRACTOR SHALL VERIFY ALL NECESSARY DIMENSIONS IN THE FIELD PRIOR TO ORDERING AFFECTED MATERIAL, PRODUCING SHOP OR TEMPORARY WORKS DRAWINGS OR FABRICATING AFFECTED COMPONENTS.
4. CONSTRUCTION STAGES AND LOADS ARE THE RESPONSIBILITY OF THE CONTRACTOR.

PRELIMINARY/ FOR DISCUSSION
NOT FOR CONSTRUCTION

Consultant Logo

Rev.	Date	Description	Init

REVISIONS

BRITISH COLUMBIA | Ministry of Transportation and Infrastructure
South Coast Region

LOWER MAINLAND DISTRICT
HIGHWAY 1

232ND ST. UNDERPASS NO. 01648 – IMPACT DAMAGE REPAIR SITE PLAN

PREPARED UNDER THE DIRECTION OF
DAVID HARVEY, P.ENG.
ENGINEER OF RECORD
DATE 2022-07-19

DESIGNED T. VUJIC DATE 2022-07-19
CHECKED D. HARVEY DATE 2022-07-19
DRAWN N. LUCERO DATE 2022-07-19
SCALE AS NOTED
NEGATIVE No.

FILE No. | PROJECT No. | REG. 1 | DRAWING No. 01648-101

CANCEL PRINTS BEARING PREVIOUS LETTER

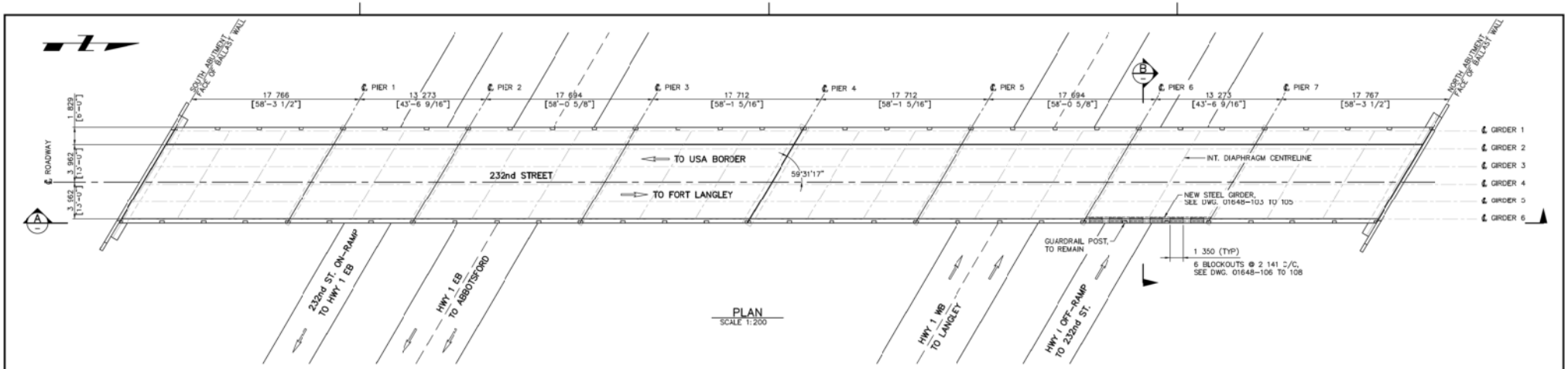

PLAN
SCALE 1:200

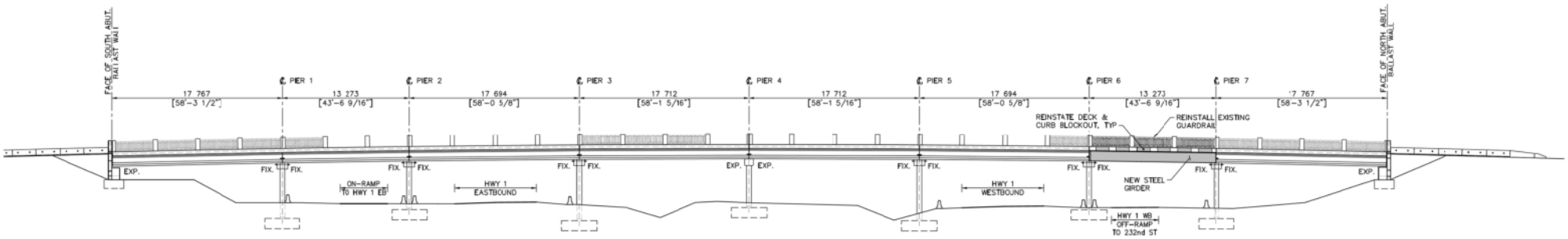

SECTION A
SCALE 1:200

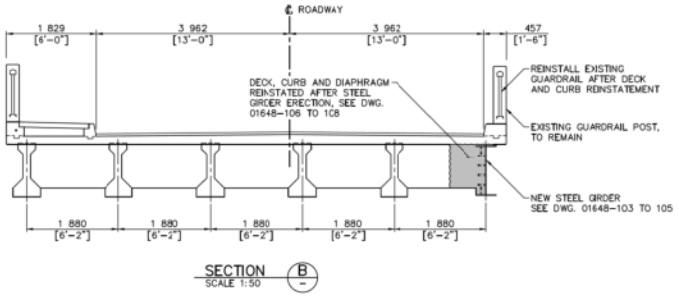

SECTION B
SCALE 1:50

(CONCRETE REPAIR BETWEEN BLOCKOUTS, INTERMEDIATE DIAPHRAGM SHOWN, PIER DIAPHRAGM SIMILAR)

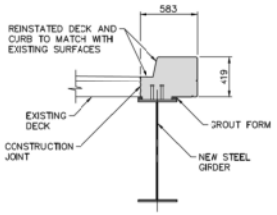

CONCRETE REPAIR AT BLOCKOUT, TYP

GENERAL:

1. CAREFULLY REMOVE AND REPLACE ALL DAMAGED MATERIAL.
2. PROTECT MATERIAL NOT DESIGNATED FOR REMOVAL, REPAIR AS NEEDED.
3. CAST CONCRETE TO ALIGN WITH EXISTING SURFACES.
4. FINISH CONCRETE SIMILAR TO EXISTING SURFACES.
5. WORK TO BE IN ACCORDANCE WITH MOTI STANDARD SPECIFICATIONS AND AS NOTED.
6. CONSTRUCTION JOINTS TO BE CONTINUOUSLY ROUGHENED.
7. DIMENSIONS SHOWN ARE BASED ON RECORD DRAWINGS – FIELD CONFIRM PRIOR TO FABRICATION.

NOTES:

1. DESIGN CSA-S6-14 "CANADIAN HIGHWAY BRIDGE DESIGN CODE" AND MOTI SUPPLEMENT TO S6-14; LOADING BCL-625. [ORIGINAL DESIGN: AASHTO, 1957 EDITION, H20-S20 LOADING]
2. MATERIALS:
   - CLASS 35 MPa CONCRETE WITH THE FOLLOWING PARAMETERS:
     NOMINAL MAXIMUM COARSE AGGREGATE: 14 mm
     AIR CONTENT: 5 ± 1%
     WATER / CEMENT RATIO: 0.40
   - REINFORCING TO CONFORM TO CSA G30.18, GRADE 400R

PRELIMINARY/ FOR DISCUSSION
NOT FOR CONSTRUCTION

Consultant Logo

Rev.	Date	Description	Init

REVISIONS

BRITISH COLUMBIA | Ministry of Transportation and Infrastructure
South Coast Region

LOWER MAINLAND DISTRICT
HIGHWAY 1

232ND ST. UNDERPASS NO. 01648 – IMPACT DAMAGE REPAIR GENERAL ARRANGEMENT

PREPARED UNDER THE DIRECTION OF
DAVID HARVEY, P.ENG.
ENGINEER OF RECORD
DATE 2022-07-19

DESIGNED T. VUUC DATE 2022-07-19
CHECKED D. HARVEY DATE 2022-07-19
DRAWN N. LUCERO DATE 2022-07-19
SCALE AS NOTED
NEGATIVE No.

FILE No. | PROJECT No. | REG. 1 | DRAWING No. 01648-102

CANCEL PRINTS BEARING PREVIOUS LETTER

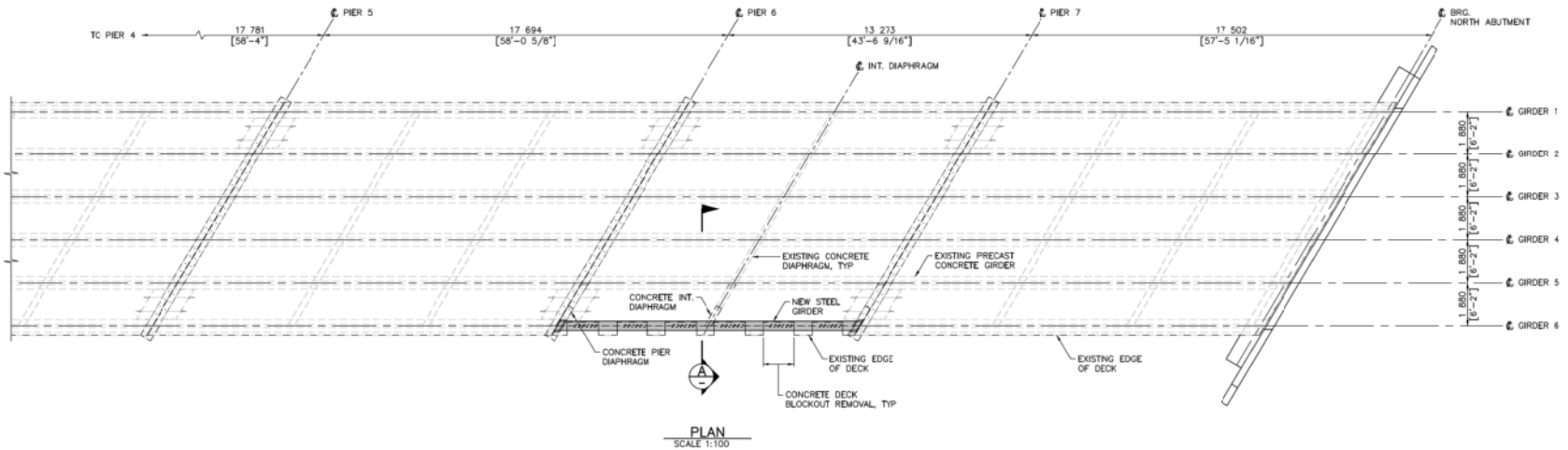

PLAN
SCALE 1:100

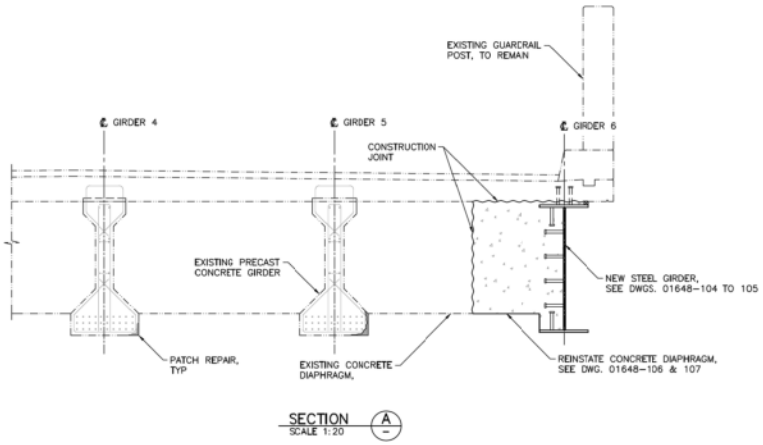

SECTION A
SCALE 1:20

PATCH REPAIR:

1. PREPARE REPAIR AREA: REMOVE ALL DAMAGED OR LOOSE CONCRETE AND CHIP BACK TO SOUND SUBSTRATE TO MINIMIZE FEATHERED EDGES.
2. ALL SURFACES RECEIVING NEW CONCRETE ARE TO BE PRESSURE WASHED WITH MINIMUM 35 MPa AND CONTINUOUSLY ROUGHENED TO AN AMPLITUDE OF 5 mm±.
3. APPLY REPAIR MORTAR IN LAYERS MAXIMUM 38 mm THICKNESS UNTIL GIRDER CROSS SECTION IS RESTORED.
4. USE SIKAREPAIR SHB PATCHING MORTAR OR AS APPROVED IN ACCORDANCE WITH MANUFACTURER'S INSTRUCTIONS.

NOTES:

1. FOR NOTES, SEE DWG. 01648-102.

PRELIMINARY/ FOR DISCUSSION NOT FOR CONSTRUCTION

Consultant Logo

Rev	Date	Description	Init

REVISIONS

BRITISH COLUMBIA | Ministry of Transportation and Infrastructure
South Coast Region

LOWER MAINLAND DISTRICT
HIGHWAY 1

232ND ST. UNDERPASS NO. 01648 – IMPACT DAMAGE REPAIR GIRDER LAYOUT

PREPARED UNDER THE DIRECTION OF
DAVID HARVEY, P.ENG.
ENGINEER OF RECORD
DATE 2022-07-19

DESIGNED T. VUJIC DATE 2022-07-19
CHECKED D. HARVEY DATE 2022-07-19
DRAWN N. LUCERO DATE 2022-07-19
SCALE AS NOTED
NEGATIVE No.

FILE No. | PROJECT No. | REG. 1 | DRAWING No. 01648-103

CANCEL PRINTS BEARING PREVIOUS LETTER

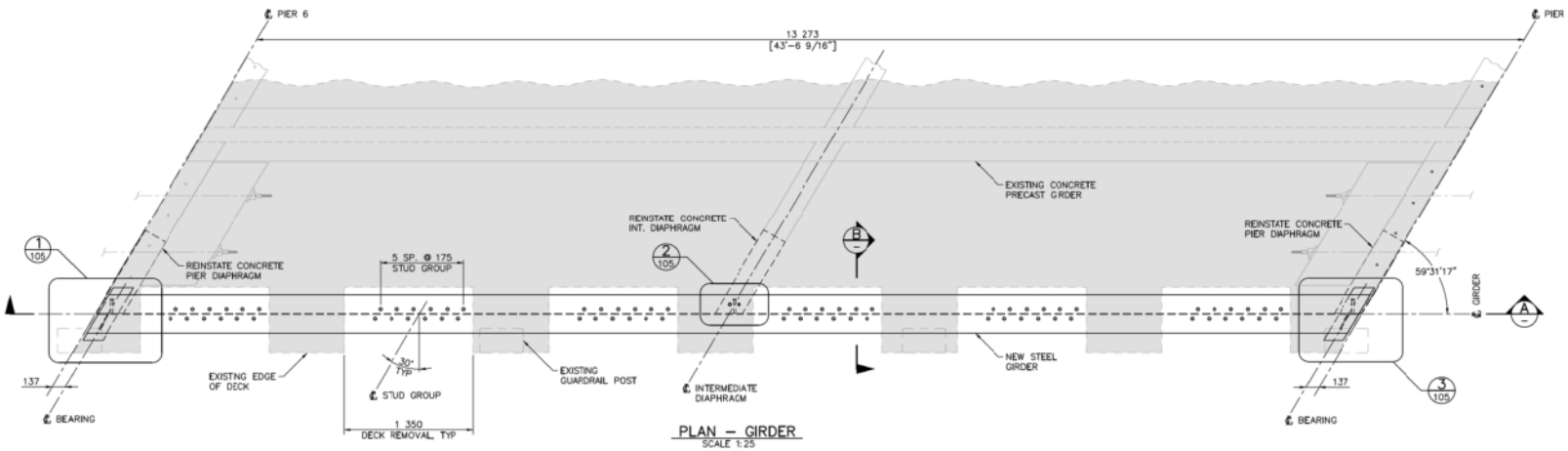

PLAN – GIRDER
SCALE 1:25

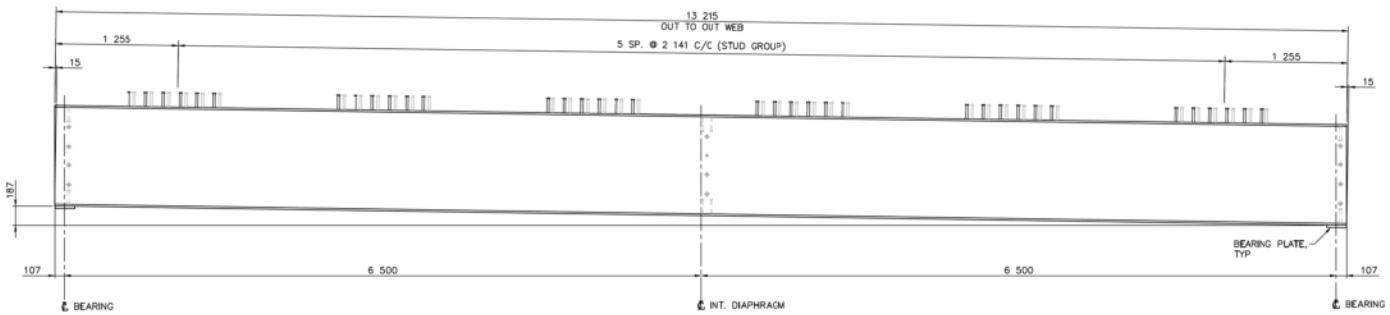

SECTION A
SCALE 1:25

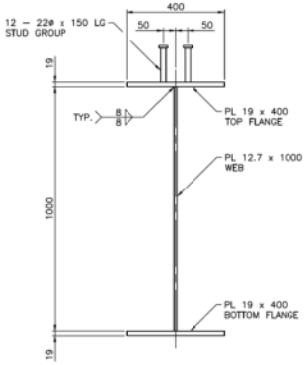

SECTION B
SCALE 1:10

PAINT NOTES:

1. COMMERCIAL BLAST CLEAN AREA TO BE PAINTED ; SSPC–SP6.
2. STRIPE COAT CORNERS AND EDGES.
3. ONE COAT INORGANIC ZINC–RICH PAINT 64–90 MICRONS.
4. FIELD TOUCH UP WITH TWO COATS ORGANIC ZINC–RICH PAINT – ZIRGA OR APPROVED EQUAL.

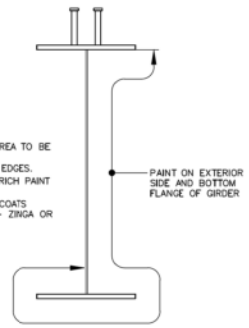

SECTION B
SCALE 1:10

NOTES:

1. STEEL: CONFORM TO CSA G40.21M GRADE 350AT CAT 3 (PLATE)
2. STUDS: ASTM A108, 22 DIAMETER UNLESS NOTED OTHERWISE.
3. STEEL FABRICATIONS: ALL WELDS TO BE COMPLETED IN ACCORDANCE WITH CSA W59. ALL BUTT WELDS TO BE INSPECTED BY ULTRASONIC EXAMINATION IN ACCORDANCE WITH CSA W59. MINIMUM 6 mm FILLET WELD UNLESS NOTED OTHERWISE.
4. FLANGED TO WEB WELDS SHALL BE BY AN AUTOMATIC PROCESS WHICH PROVIDES A CONTINUOUS WELD THROUGHOUT THE LENGTH OF EACH GIRDER SEGMENT.
5. STEEL GIRDER WORK SHALL CONFORM WITH THE REQUIREMENTS OF SS421 OF THE MINISTRY STANDARD SPECIFICATIONS FOR HIGHWAY CONSTRUCTION. THE CONTRACTOR SHALL PROVIDE ERECTION PROCEDURE PREPARED, SIGNED AND SEALED BY A PROFESSIONAL ENGINEER REGISTERED IN BRITISH COLUMBIA.

PRELIMINARY/ FOR DISCUSSION
NOT FOR CONSTRUCTION

Consultant Logo

Rev	Date	Description	Init

REVISIONS

BRITISH COLUMBIA | Ministry of Transportation and Infrastructure
South Coast Region

LOWER MAINLAND DISTRICT
HIGHWAY 1

232ND ST. UNDERPASS NO. 01648 – IMPACT DAMAGE REPAIR
GIRDER DETAILS – SHEET 1

PREPARED UNDER THE DIRECTION OF
DAVID HARVEY, P.ENG.
ENGINEER OF RECORD
DATE 2022-07-19

DESIGNED T. VUJIC DATE 2022-07-19
CHECKED D. HARVEY DATE 2022-07-19
DRAWN N. LUCERO DATE 2022-07-19
SCALE AS NOTED
NEGATIVE No.

FILE No. | PROJECT No. | REG. 1 | DRAWING No. 01548–104

CANCEL PRINTS BEARING PREVIOUS LETTER

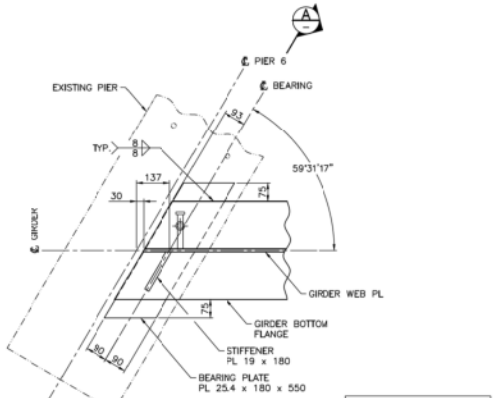

DETAIL 1/104
SCALE 1:10

NOTE:
EXISTING GIRDER AND PIER DIAPHRAGM NOT SHOWN FOR CLARITY.
FOR ANCHOR STUD DETAILS, SEE DETAIL "3"

GIRDER DETAILS AT PIER 6 END SHOWN,
GIRDER DETAILS AT PIER 7 END OPPOSITE HAND

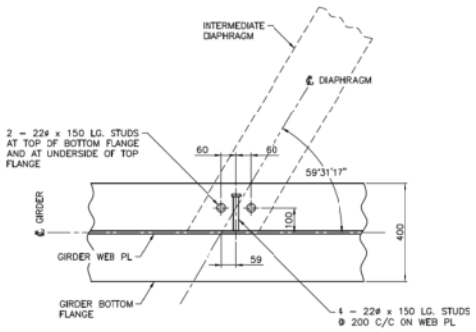

DETAIL 2/104
SCALE 1:10

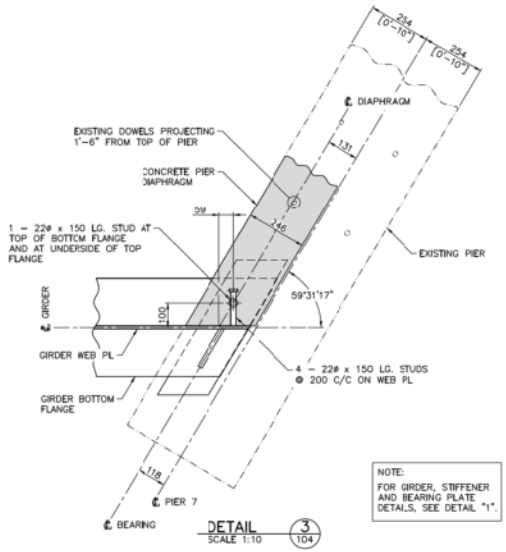

DETAIL 3/104
SCALE 1:10

NOTE:
FOR GIRDER, STIFFENER AND BEARING PLATE DETAILS, SEE DETAIL "1".

CONCRETE DIAPHRAGM AT PIER 7 SHOWN,
CONCRETE DIAPHRAGM AT PIER 6 OPPOSITE HAND

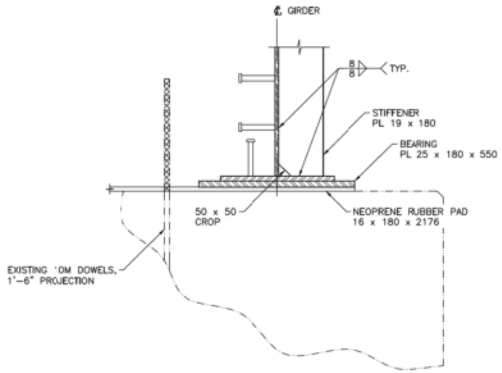

SECTION A/–
SCALE 1:10

NOTES:

1. FOR NOTES, SEE DWG. 01648–104.

PRELIMINARY/
FOR DISCUSSION
NOT FOR CONSTRUCTION

Consultant Logo

Rev.	Date	Description	Init

REVISIONS

BRITISH COLUMBIA | Ministry of Transportation and Infrastructure
South Coast Region

LOWER MAINLAND DISTRICT
HIGHWAY 1

232ND ST. UNDERPASS NO. 01648 – IMPACT DAMAGE REPAIR
GIRDER DETAILS – SHEET 2

PREPARED UNDER THE DIRECTION OF
DAVID HARVEY, P.ENG.
ENGINEER OF RECORD
DATE 2022-07-19

DESIGNED T. VUJIC DATE 2022-07-19
CHECKED D. HARVEY DATE 2022-07-19
DRAWN N. LUCERO DATE 2022-07-19
SCALE AS NOTED
NEGATIVE No.

FILE No. | PROJECT No. | REG. 1 | DRAWING No. 01648–105

CANCEL PRINTS BEARING PREVIOUS LETTER

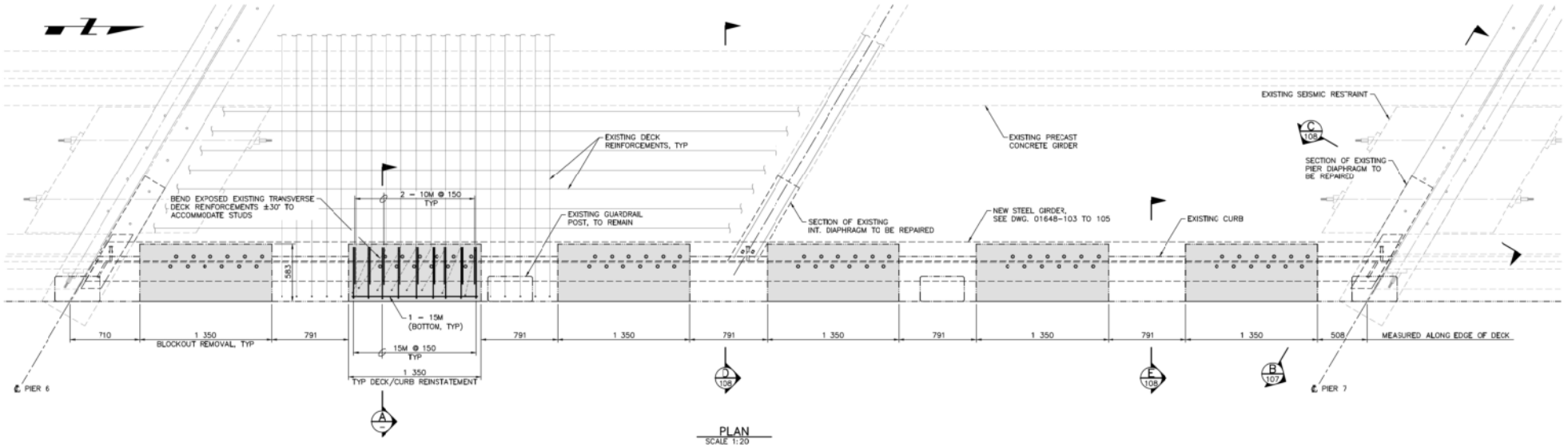

PLAN
SCALE 1:20

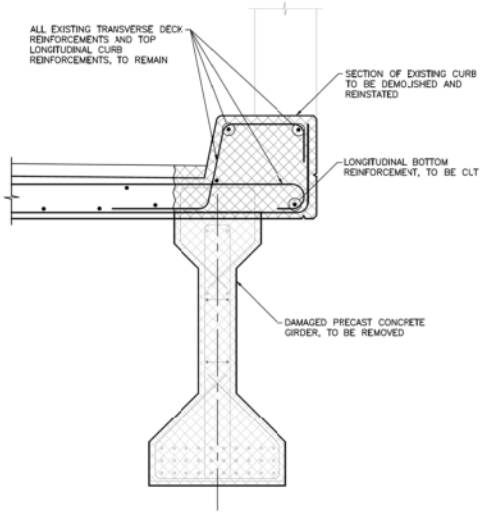

SECTION A – SCALE 1:10

EXISTING CONDITION & REMOVAL

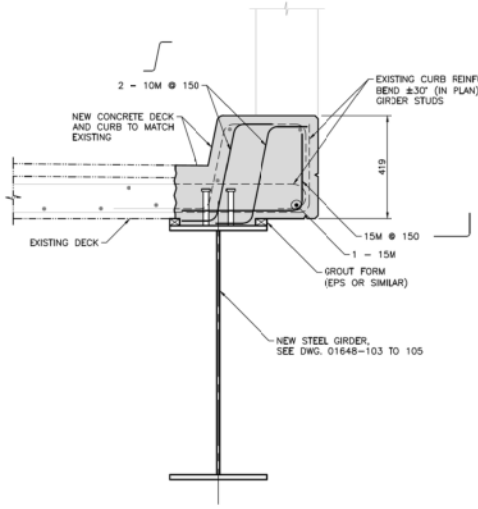

SECTION A – SCALE 1:10

NEW STEEL GIRDER & DECK/CURB REINSTATEMENT

NOTES:

1. FOR NOTES, SEE DRAWING 01648–102.
2. LAP OF BARS FOR SPLICES SHALL BE AS FOLLOWS:

	LAP LENGTH	TOP *
13M	320	420
15M	480	630
* HORIZONTAL BAR WITH MORE THAN 300 CONCRETE BELOW		

3. STAGGER SPLICES IN DECK LONGITUDINAL BARS, TYPICAL.
4. CONCRETE COVER TO BE 35 mm EXCEPT DECK SOFFIT TO BE 25 mm.
5. SIDEWALK TO BE CAST AFTER DECK CONCRETE TO HAVE 35 MPa CONCRETE STRENGTH.
6. STEEL FOR ANCHORS TO BE CONFORMED TO CSA / CAN–G40.21M GRADE 300W.
7. ANCHORS TO BE GALVANIZED AFTER FABRICATION. GALVANIZING TO BE IN ACCORDANCE WITH SS 422.36.

PRELIMINARY/ FOR DISCUSSION NOT FOR CONSTRUCTION

Consultant Logo

Rev	Date	Description	Init

REVISIONS

BRITISH COLUMBIA | Ministry of Transportation and Infrastructure
South Coast Region

LOWER MAINLAND DISTRICT
HIGHWAY 1

232ND ST. UNDERPASS NO. 01648 – IMPACT DAMAGE REPAIR DECK DETAILS – SHEET 1

PREPARED UNDER THE DIRECTION OF
DAVID HARVEY, P.ENG.
ENGINEER OF RECORD
DATE 2022–07–19

DESIGNED T. VUJIC DATE 2022–07–19
CHECKED D. HARVEY DATE 2022–07–19
DRAWN N. LUCERO DATE 2022–07–19
SCALE AS NOTED
NEGATIVE No.

FILE No. | PROJECT No. | REG. 1 | DRAWING No. 01648–106

CANCEL PRINTS BEARING PREVIOUS LETTER

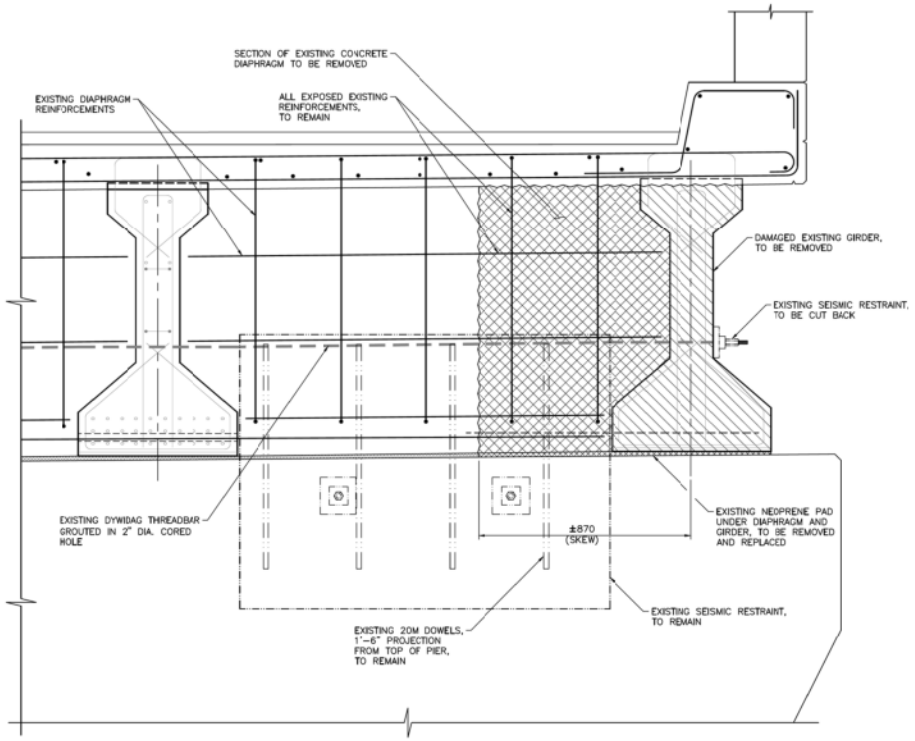

SECTION B / 106
SCALE 1:10

EXISTING CONDITION & REMOVAL

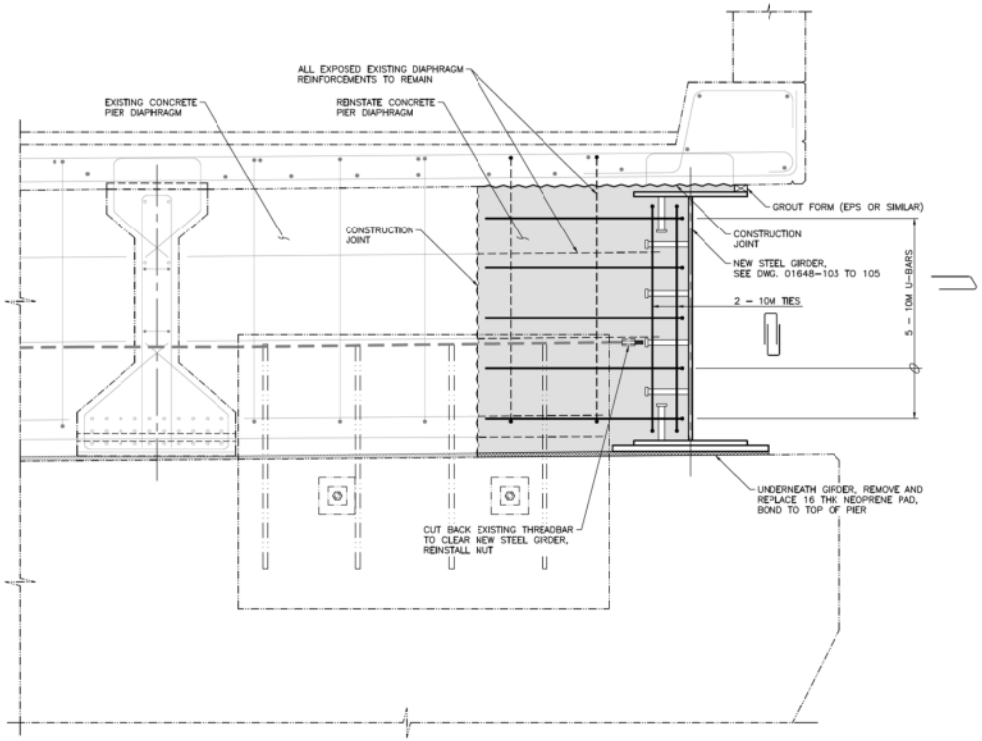

SECTION B / 106
SCALE 1:10

NEW STEEL GIRDER & PIER DIAPHRAGM REINSTATEMENT

NOTES:
1. FOR NOTES, SEE DRAWING 01648-106.

Consultant Logo

Rev	Date	Description	Init

REVISIONS

BRITISH COLUMBIA | Ministry of Transportation and Infrastructure
South Coast Region

LOWER MAINLAND DISTRICT
HIGHWAY 1

232ND ST. UNDERPASS NO. 01648 – IMPACT DAMAGE REPAIR
DECK DETAILS – SHEET 2

PREPARED UNDER THE DIRECTION OF
DAVID HARVEY, P.ENG.
ENGINEER OF RECORD
DATE 2022-07-19

DESIGNED T. VUJIC DATE 2022-07-19
CHECKED D. HARVEY DATE 2022-07-19
DRAWN N. LUCERO DATE 2022-07-19
SCALE AS NOTED
NEGATIVE No.

FILE No. | PROJECT No. | REG. 1 | DRAWING No. 01648-107

PRELIMINARY/ FOR DISCUSSION
NOT FOR CONSTRUCTION

CANCEL PRINTS BEARING PREVIOUS LETTER

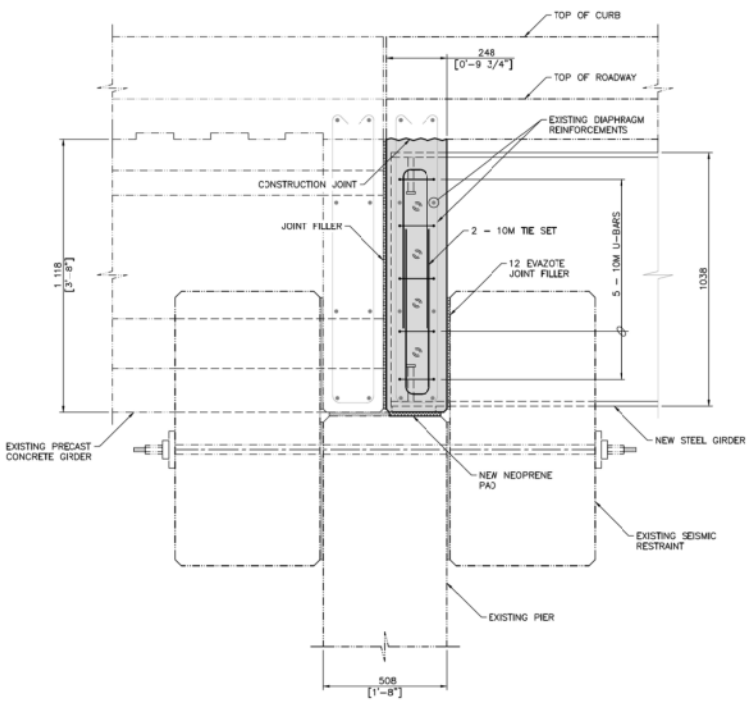

SECTION C
SCALE 1:10 (106)

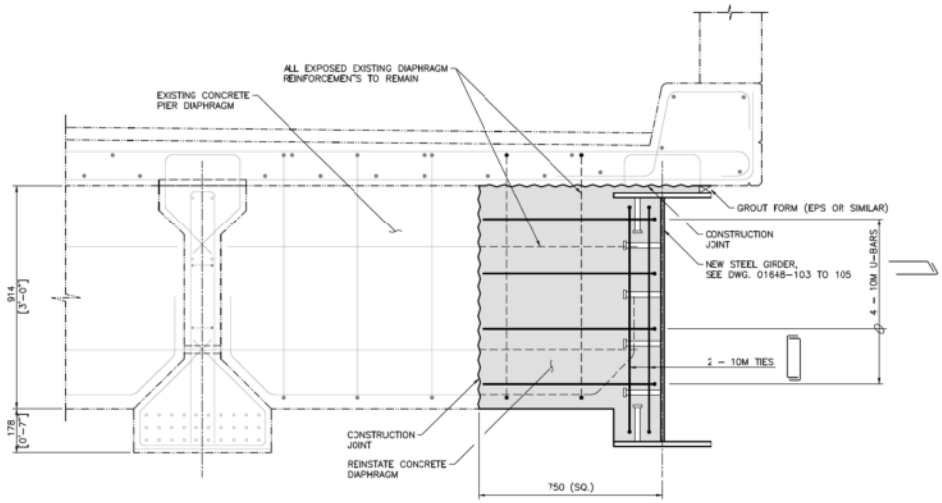

SECTION D
SCALE 1:10 (106)

NEW STEEL GIRDER & INTERMEDIATE DIAPHRAGM REINSTATEMENT

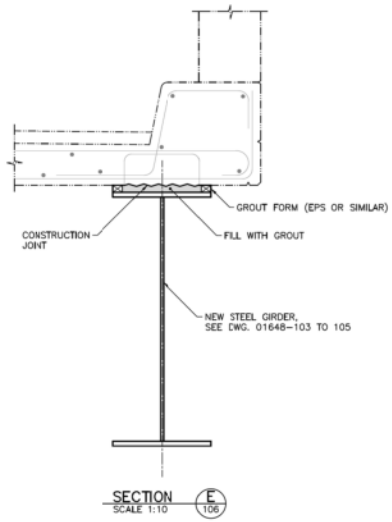

SECTION E
SCALE 1:10 (106)

BETWEEN BLOCKOUTS

NOTES:
1. FOR NOTES, SEE DRAWING 01648-106.

Consultant Logo

Rev	Date	Description	Init

REVISIONS

BRITISH COLUMBIA | Ministry of Transportation and Infrastructure
South Coast Region

LOWER MAINLAND DISTRICT
HIGHWAY 1

232ND ST. UNDERPASS NO. 01648 - IMPACT DAMAGE REPAIR
DECK DETAILS - SHEET 3

PREPARED UNDER THE DIRECTION OF
DAVID HARVEY, P.ENG.
ENGINEER OF RECORD
DATE 2022-07-19

DESIGNED T. VUJIC DATE 2022-07-19
CHECKED D. HARVEY DATE 2022-07-19
DRAWN N. LUCERO DATE 2022-07-19
SCALE AS NOTED
NEGATIVE No.

FILE No. | PROJECT No. | REG. 1 | DRAWING No. 01648-108

PRELIMINARY/ FOR DISCUSSION NOT FOR CONSTRUCTION

CANCEL PRINTS BEARING PREVIOUS LETTER

Associated Engineering (B.C.) Ltd.
#500 - 2889 East 12th Avenue
Vancouver, B.C., Canada, V5M 4T5

TEL: 604.293.1411
FAX: 604.291.6163
www.ae.ca

June 24, 2022
File: 2020.2990.000

Alfred Ho, P.Eng.
Senior Asset Renewal Engineer, Asset Management - Structural Engineering
Ministry of Transportation and Infrastructure

Re: BRIDGE NO. 01648 LIVINGSTONE ROAD UNDERPASS - 232 STREET OVER HWY 1 EMERGENCY INSPECTION

Dear Mr. Ho:

The **Ministry of Transportation and Infrastructure (MoTI)** retained **Associated Engineering (AE)** to perform an emergency inspection and assessment of **Bridge No. 01648 - Livingstone Road Underpass** superstructure that was damaged from an oversized vehicle impact. This bridge is colloquially known as the 232nd Street Overpass. **Monica Ip, M.Eng., P.Eng.**, and **Jagdeep Biran, M.Eng., EIT**, of AE, inspected the damaged superstructure and assessed the condition of the bridge on June 23, 2022. AE was escorted by **Pravdeep Sekhon**, MoTI, for the entire inspection duration.

The purpose of the emergency detailed inspection was to determine the extent of damage, identify major concerns, and provide direction on actionable items to reopen the bridge structure and exit lane underneath. This report presents our inspection observations and recommendations.

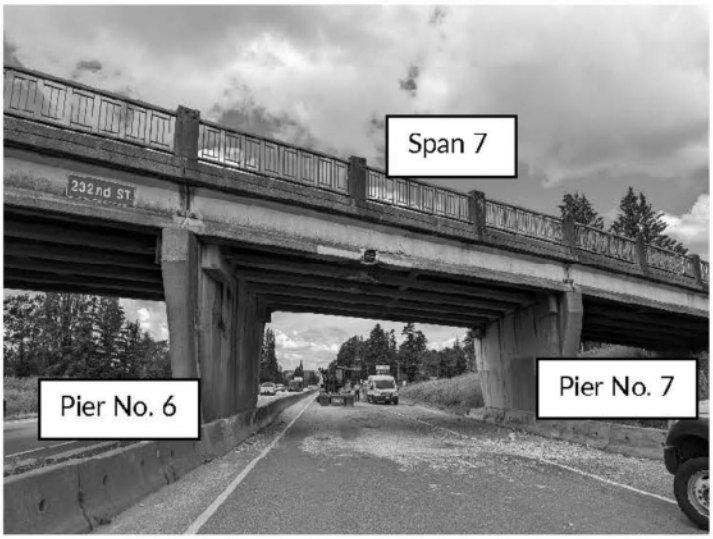

232nd Street Overpass East Elevation
westbound exit at Exit 66 (June 23, 2022)

carbon neutral since2009

BEST MANAGED COMPANIES Platinum member

1 STRUCTURE DESCRIPTION

The 232nd Street Overpass spans 132.9 m (436 ft) across the Trans-Canada Highway (Highway 1) in Langley, BC, and carries a single lane of northbound and southbound traffic. There is a pedestrian sidewalk along the west side of the bridge deck.

The eight-span prestressed concrete I-girder bridge was constructed in 1965. In this report, the span configuration and piers are numbered from south to north and the girders are numbered from west to east. Figure 1-1 shows a typical cross with the numbered girders.

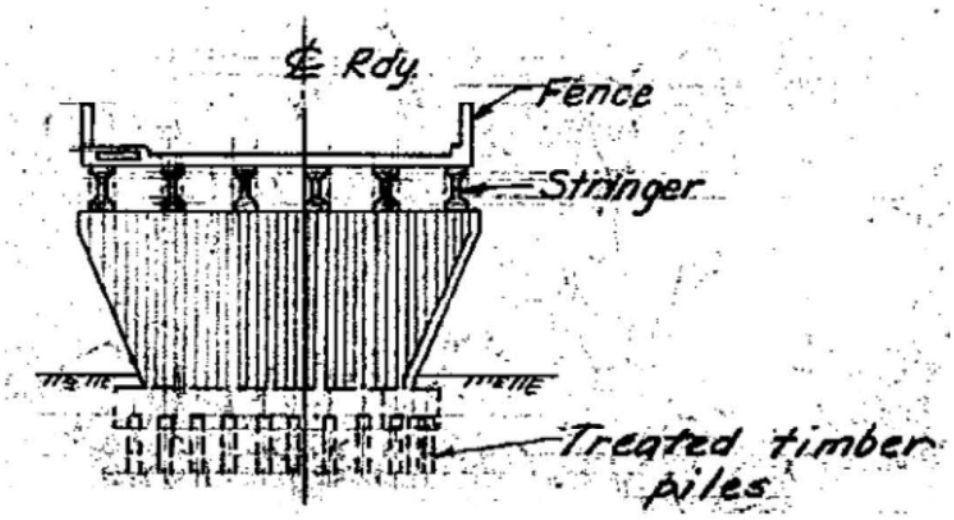

Figure 1-1
Typical Section

The affected span (Span 7) is 13.3 m (43 ft 6-9/16 in) above a 4.27 m (14 ft) exit lane. The prestressed I-girders are 1.14 m (45 in) in height, spaced at 1.88 m (6'-2") center to center, and fixed at both ends.

BEST MANAGED COMPANIES Platinum member

2 INSPECTION RESULTS

AE arrived at the impacted area at 11:30am, June 23, 2022, and left at 1:30pm. Prior to the inspection, AE was informed that the impacted area was previously struck in April of this year. The collision damage from this April event was relatively minor and a surface repair was completed.

AE completed a detailed inspection of the superstructure from an elevated work platform provided by Mainroad Lower Mainland Contracting LP (Mainroad). We were also informed that the 232nd Street Overpass was closed for traffic approximately 30-45 minutes after the collision on June 23, 2022. We visually inspected the superstructure for locations of impact damage and hammer sounded three (3) impacted girders to determine the extent of damage.

The observations are summarized as follows:

- Extensive damage to Span 7, Girder 6 (east exterior) shown in Figure 2-1 and Figure 2-2 including:
  - Damaged and completely severed prestressed reinforcement.
  - Damaged and broken reinforcing steel in the web and bottom flange.
  - Extensive spalling to the web and bottom flange (approximately 3.3 m in length.
  - Minor web cracking that extends approximately 2 m from the edge of the spalling.



Figure 2-1
Damaged east face of Girder 6 with horizontal and diagonal web cracking



Figure 2-2
Broken reinforcement and spalled concrete at Girder 6

- Damage to Span 7, Girder 4 and 5 shown in **Figure 2-3** and **Figure 2-4** including:
  - Girder 5 – Spalling at the bottom flange (740 mm length by 300 mm wide patch) that has exposed, but not damaged, the reinforcement
  - Girder 4 – Spalling at the bottom flange (350 mm length by 125 mm wide patch).



Figure 2-3
Exposed stirrup reinforcement and spall at the bottom flange of Girder 5

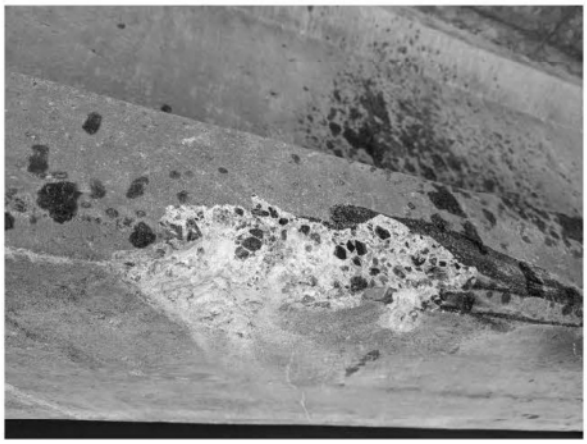

Figure 2-4
Spall at the bottom flange of Girder 4

- No signs of damage to the deck surface of the 232nd Street Overpass.

After the inspection, instructions left to Pravdeep, MoTI, were:

- Remove all the loose material, including concrete and protruding reinforcing bars, at the impacted area.
- Only single lane alternating traffic is allowed along the west side of the 232nd Street Overpass until the damaged girder is replaced.

It was also agreed that the damaged area on Girder 6 would be covered with plywood as a temporary measure to minimize the risk of visual distraction to the public.

3 RECOMMENDATIONS

AE recommends Girder 6 of Span 7 be replaced since the prestressed reinforcement in the bottom flange has been completely severed. We understand this structure is due for replacement within a few years and recommend removing the damaged girder and replacing it with a steel girder for scheduling, erectability and cost-effectiveness. The Ministry may also consider localized patching of the bottom flanges of Girder 4 and Girder 5 to cover exposed reinforcement and restore concrete cover.

As stated, AE also recommends that the northbound lane along the east side of the structure remain closed and only allow single lane alternating traffic along the southbound lane until the bridge repairs are complete.

4 CLOSURE

This report was prepared for the Ministry of Transportation and Infrastructure to present the results of our emergency inspection of Bridge No. 01648 - Livingstone Road Underpass in Langley, BC.

The services provided by Associated Engineering (B.C.) Ltd. In the preparation of this report were conducted in a manner consistent with the level and skill ordinarily exercised by members of the profession currently practicing under similar conditions. No other warranty expressed or implied is made.

Respectfully submitted,

Associated Engineering (B.C.) Ltd.
Engineers & Geoscientists BC Permit Number 1000163

Prepared by,

PROFESSIONAL ENGINEER — PROVINCE OF BRITISH COLUMBIA — M. C. IP # 51460 — 2022 JUNE 24

Monica Ip, M.Eng., P.Eng
Structural Engineer

Reviewed By,

Tijana Vulic

Tijana Vulic, M.Eng., P.Eng.
Structural Engineer

MI/TV/sn

Attachments: Bridge Inspection Photo Sheet

CANADA'S BEST MANAGED COMPANIES

Associated Engineering | 75 YEARS

INSPECTION REPORT

BRIDGE INSPECTION PHOTO SHEET

Structure	Location	Inspection Date
Bridge No. 01648: 232nd Street Overpass	Hwy 1, Exit 66 in Langley, BC	June 23, 2022



Figure 1: 232nd Street Overpass - East Elevation of Span 7



Figure 2: 232nd Street Overpass - East Elevation of Span 7



Figure 3: 232nd Street Overpass - West Elevation of Span 7



Figure 4: 232nd Street Overpass - Deck surface, sidewalk along west side (facing north)



Figure 5: North elevation of Pier 6
(facing south)



Figure 6: South elevation of Pier 7
(facing north)



Figure 7: Horizontal cracking along the top of the web and diagonal cracking in web at the SE face of Girder 6



Figure 8: Spall at the bottom flange of east face of Girder 6



Figure 9: Spall and damaged reinforcement at the bottom flange of Girder 6



Figure 10: Cracking in web at the north extent of the spall at Girder 6, area is delaminated



Figure 11: Girder 6 to Girder 4 bottom flange soffit (facing south)



Figure 12: Exposed reinforcement at extent of the west side spall (3.3m length) of Girder 6



Figure 13: Exposed reinforcement at north extent of the west side spall of Girder 6



Figure 14: Severed and damaged prestressed reinforcement and rebar at Girder 6 (facing east)



Figure 15: Severed and damaged prestressed reinforcement at bottom flange and web spall at Girder 6

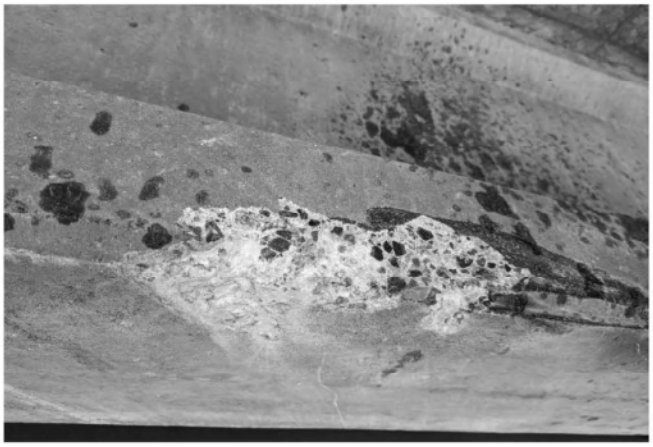

Figure 16: Spall at east side of bottom flange of Girder 4



Figure 17: Spall on east side of bottom flange at Girder 5

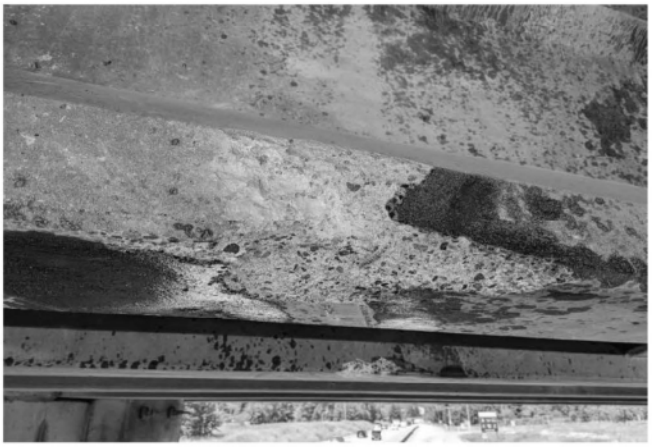

Figure 18: Exposed reinforcement at spall at bottom flange of Girder 5

NOTICE and ORDER

Vehicle(s) inspected this **23** of **JUN** YR **2022** at **09:22** (24hr Clock) on **HWY #1 @ 232 OFF W/B** at or near **Surrey**

Violation Ticket #:

The undersigned Peace Officer has reasonable and probable grounds to believe that the vehicle(s) inspected and described below does not comply with the Motor Vehicle, Commercial Transport or Passenger Transportation Act and Regulations. The owner/operator is hereby **given notice to:**

PU s.22

1. Immediately remove the vehicle from the highway until such time as it complies with the Motor Vehicle Act and Regulations (Division 25)

PU:

2. Promptly take the vehicle to a Designated Inspection Facility for the purpose of determining compliance with the Motor Vehicle Act and Regulations (Division 25)

This Notice and Order does not authorize operation of the vehicle(s) with identified defects. Non-compliance with this Notice and Order is an offence. Police: ☐ Peace Officer: ☒

Power Unit:

Owner: **TRIAHN ENTERPRISES LTD.**
Address: **202-45485B KNIGHT RD**
City: **CHILLIWACK** Prov: **BC** Postal Code: **V2R3G3**
Registration: s.15 NSC #: **200753210** Jur: **BC**
Plate #: **NG7145** Year: **2020** Make: **KENWORTH**
Body Style: **DUMP TRUCK** VIN: s.15
GVW: **0056500** Odometer: **KM**
CVIP decal: **FO78658** CVIP Jur: **BC**
Cargo Seal #: UN: DG Type:

Trailer #1:

Registration: s.15 Plate #: **38455J** Jur: **BC**
VIN: s.15 Year: **2014** Make: **CROSS COUN**
CVIP decal: **FN47891** CVIP Jur: **BC**
Cargo Seal #: UN: DG Type:

Driver: s.22
D.L.# s.22 D.O.B. s.22 Jur: **BC**

INSPECTION RESULTS "X" - Violation Present "O" - Out of Service "C" - Pass with Caution "N" - Inspection Note

INSPECTION ITEMS	#	PU	T1	COMMENTS
Miscellaneous	55	X		MVA @ 232 & Hwy #1
	55		X	MVA @ 232 & Hwy #1

ADDITIONAL COMMENTS:
Power Unit may not tow anything until hitch replaced and hitch plate inspected to ensure structural integrity

Peace Officer (Inspector): **D.STANLEY** Number: **MV798** Signature:
8150 Nordel Way Delta V4G8A9

SEE REVERSE FOR DETAILS REGARDING COMPLIANCE.

The information on this form is collected under the authority of the Motor Vehicle Act, Section 217. The information will be used to process your vehicle inspection and/or Notice and Order. If you have any questions please contact the issuing Officer or call CVSE at (250) 952-0577. Visit www.cvse.ca

MV3073E (072013)

NOTICE AND ORDER COMPLIANCE INFORMATION

You MUST do the following (as indicated on Page 1):

A Notice and Order 1 has been issued to s.22

The vehicle is to be immediately removed from the highway and towed to a location of the operator's choice or place designated by the peace officer, at the owner's expense. It is to be kept from the highway until such time as it is repaired and passes an inspection performed by an Authorized Inspector at a Designated Inspection Facility.

A Notice and Order 2 has been issued to s.22

The vehicle described on the Notice and Order must promptly undergo a complete vehicle inspection by an Authorized Inspector at a Designated Inspection Facility. Should it not comply with the Motor Vehicle Act and Regulations it must be repaired immediately and, within 30 days of the Notice, a passed inspection report must be completed by an Authorized Inspector; the inspection facility will forward the report to the Commercial Vehicle Safety and Enforcement Branch, Victoria. A valid inspection decal must be displayed on the vehicle. A copy of the inspection report must be kept with the vehicle for validity of the decal. Locations of DESIGNATED INSPECTION FACILITIES can be obtained at a Driver Licencing Centre or at an Autoplan Agent.

This Notice and Order does not authorize operation of the vehicle(s) with identified defects. Non-compliance with this Notice and Order is an offence.

NOTICE

The owner may choose not to have the vehicle inspected or repaired, but rather to surrender the vehicle license and number plates to the Vice President Operations – ICBC or his/her designate. Should the vehicle license and number plates be surrendered or seized by a Peace Officer, the vehicle owner must make a separate application to ICBC or its agents for a refund.

It is the obligation of the registered owner to advise a subsequent registered owner of any outstanding vehicle inspection requirements.

DISPOSITION

Violation(s) corrected: Yes ☐ No ☐ Date: _____ Agency: _____

Peace Officer (Print): _____ Number: _____

WARNING

IT IS AN OFFENCE TO OPERATE A VEHICLE WHICH DOES NOT COMPLY WITH THE MOTOR VEHICLE ACT AND REGULATIONS OR THIS NOTICE AND ORDER. FAILURE TO COMPLY WITH A NOTICE AND ORDER MAY RESULT IN THE REFUSAL OF FURTHER VEHICLE LICENSE TRANSACTIONS. PENALTIES FOR OPERATING A VEHICLE IN CONTRAVENTION OF A NOTICE AND ORDER INCLUDE A FINE AND SEIZURE OF THE VEHICLE LICENSE AND NUMBER PLATES.

The information on this form is collected under the authority of the Motor Vehicle Act, Section 217. The information will be used to process your vehicle inspection and/or Notice and Order. If you have any questions please contact the issuing Officer or call CVSE at (250) 952-0577. Visit www.cvse.ca

MV3073E (072013)

Kelly, Sean TRAN:EX

From: Stanley, Derek TRAN:EX
Sent: July 29, 2022 9:33 AM
To: Cordoviz, Arlene TRAN:EX
Subject: 232 strike

Here's the driver / owner stuff for that strike.


Beautiful British Columbia
NG 7145
18
FEB 2023


Beautiful British Columbia
3845 5J

Withheld pursuant to/removed as

s.22


Triahn Enterprises (2018) Ltd.
Kyle VanGeel
202 - 45485 Knight Rd., Bldg. B
Chilliwack, BC V2R 3G3
s.22
Cell: 604-798-4131
Phone: 604-858-7266
Fax: 604-824-8454

Kelly, Sean TRAN:EX

From: Berry, Sundeep TRAN:EX
Sent: July 27, 2022 12:44 PM
To: Cordoviz, Arlene TRAN:EX
Cc: Barsky, Kate TRAN:EX
Subject: 232 Overpass FOI
Attachments: FW: 232 Overpass Incident; Telephone Conversations with TRIAHN ENTERPRISES LTD.docx; RE: 232 Overpass Incident; RE: 232 overpass strike; FW: 232 Overpass Incident

Hi Arlene,

Details which may be required for FOI request related to 22 Overpass incident of 23 June 2022 are attached. All email correspondence both internally and with the Carrier as also a word document with my telephone conversations with the Carrier are in the attachment.

I will upload more documents as and when I get them from the Carrier.

www.cvse.ca

Sundeep Berry
Carrier Safety Inspector
Commercial Vehicle Safety & Enforcement
Ministry of Transportation & Infrastructure
Phone 604-398-5879

Telephone Conversations with TRIAHN ENTERPRISES LTD. NSC #:200753210

14 Jul 2022; 12:52; Outgoing call 3 minutes from work cell; To Kyle VanGeel (owner) @ cell 604-798-4131 – Brief of the conversation - Introduced each other, explained requirement of obtaining documents from Carrier related to 232 Overpass strike, will follow up this conversation with an email stating list of documents required, obtained Kyle email id.

15 Jul 2022; 09:25; Outgoing call 1 minute from work cell; To s.22 @604-858-7266 – Brief of the conversation – Introduced each other, explained not to sure of Kyle's email id, hence forwarding email sent to Kyle yesterday, obtained office email id.

20 Jul 2022; 12:46; Outgoing call 2 minutes from work cell; s.22 @604-858-7266 – Brief of the conversation – Documents still awaited, please send ASAP

26 Jul 2022; 13:08; Outgoing call from work cell; To Kyle VanGeel (owner) @ cell 604-798-4131 – No reply, left voicemail for call back – 13:11; Call back incoming – Brief of the conversation – Kyle has been very busy in business, has not received any email, will look for it, informed him that I will re forwarding the email again.

27 Jul 2022; 08:39; Outgoing call from work cell; To Kyle VanGeel (owner) @ cell 604-798-4131 – No reply, received call back – 08:40 incoming 2 minutes – Brief of the conversation – Kyle said still no email received, apparently email id of Kyle noted was incorrect, obtained the corrected email id. Confirmed that email will be forwarded to new id with cc to office.








Link-Be




Link-Belt





