5002.3796
Vol 1.

Document disclosed under the *Access to Information Act*
Document divulgué en vertu de la *Loi sur l'accès à l'information*

FILE NO. 5002 - 3796

Confidential VOLUME NO. 1

VOL. 1

Confidential 5002 - 3796

DEPARTMENT OF TRANSPORT

FROM MAR. 15, 1968

TO JULY 11, 1969

Confidential

IMPORTANT – ***NOTIFY RECORDS*** *WHEN FILE IS PASSED DIRECT TO ANOTHER SECTION*

SUBJECT AIRCRAFT

SUB-SUBJECT AVIATION SAFETY INVESTIGATION

FILE TITLE AIRCRAFT ACCIDENT - CF-WMO - 14 MAR 68

Confidential

(1) DATE LEFT RECORDS	(2) PURPOSE FOR WHICH REFERRED (IF PURPOSE FOR WHICH REFERRED CANNOT BE EXPRESSED IN ONE LINE ADD MEMO TO FILE AND ENTER HERE "WITH MEMO")	(3) REFER FILE TO	(4) ENTER DATE TO BRING FORWARD WHEN REQUIRED	(5) USER'S INITIAL TO SHOW ACTION COMPLETED

VOLUME CLOSED
COMPLET

VOLUME CLOSED
COMPLET

VOLUME CLOSED
COMPLET

000002

02 - 0001

Document disclosed under the *Access to Information Act*
Document divulgué en vertu de la *Loi sur l'accès à l'information*

THIS COVER MUST NOT BE FOLDED UNDER FILE

CORRESPONDENCE TRANSFER AND CROSS-INDEX

SUBJECT	FILE NUMBER	INITIALS

Document disclosed under the *Access to Information Act*
Document divulgué en vertu de la *Loi sur l'accès à l'information*

CANADA

DATED FROM..... FILE No.....

TO..... VOLUME No.....

CLOSED VOLUME

DO NOT PLACE ANY CORRESPONDENCE ON THIS FILE

FOR SUBSEQUENT CORRESPONDENCE SEE:

FILE No..... VOLUME No.....

PLEASE KEEP ATTACHED TO TOP OF FILE

7540-21-562-8210

000004

Document disclosed under the Access to Info
Document divulgué en vertu de la Loi sur l'accès à l'info

MEMORANDUM

CLASSIFICATION

TO A: C.A.I., OTTAWA

YOUR FILE No. Votre dossier: 5002-3796

13636

OUR FILE No. Notre dossier: 5002-715 (PCAI)

RECEIVED
AUG 25 1969
C.A.E.

FROM De: P.C.A.I., VANCOUVER

DATE: July 11, 1969

FOLD

SUBJECT Sujet: ACCIDENT - Hiller FH-1100, CF-WMO approximately 5 miles east of Fort Langley, B.C., March 14, 1968.

CA10

1. Attached are 2 copies of the subject aircraft accident report. The pilot was killed. There were no passengers. The aircraft was destroyed.

2. The Engineering Laboratory Report #24/68 should be attached as Appendix 20.

C. Leyland,
Regional Superintendent,
Accident Investigation

ENCL

RECEIVED
AUG 22 69
IN

9

CGSB—6GP22a PP&S Cat. No. 3591

Document disclosed under the *Access to Information Act*
Document divulgué en vertu de la *Loi sur l'accès à l'information*

CANADA

DEPARTMENT OF TRANSPORT

AIRCRAFT ACCIDENT INVESTIGATION DIVISION

AIRCRAFT TYPE AND REGISTRATION
HILLER FH-1100 CF-WMO
LOCATION OF ACCIDENT
Approximately 5 miles east of FORT LANGLEY, B.C.
DATE OF ACCIDENT
March 14, 1968

REPORT OF THE INQUIRY INTO THE ACCIDENT OF A CIVIL AIRCRAFT

Document disclosed under the *Access to Information Act*
Document divulgué en vertu de la *Loi sur l'accès à l'information*

CONTENTS

		PAGE
PART 1	INTRODUCTION	
	ACCIDENT DETAILS	4
PART 2	FACTS ASCERTAINED BY INVESTIGATION	
	AIRCRAFT	4
	ENGINE AND PROPELLER	4
	WRECKAGE	5
	WRECKAGE – TECHNICAL EXAMINATION – INVESTIGATION & TESTS	6
	CREW	7
	WEATHER	7 & 7A
	NAVIGATION AIDS	8
	AIR TRAFFIC CONTROL AND COMMUNICATIONS	8
	FIRE FIGHTING EQUIPMENT	8 & 9
	WATER OPERATIONS	9
	ACCIDENT AREA	9
PART 3	EXAMINATION OF EVIDENCE	
	RECONSTRUCTION OF FLIGHT AND SUMMARY OF EVENTS	10
	DISCUSSION OF EVIDENCE	11
	SUMMATION	11
PART 4	CONCLUSION	
	PROBABLE CAUSE(S)	12
	RECOMMENDATIONS	12
	NOTIFICATION	12

Document disclosed under the *Access to Information Act*
Document divulgué en vertu de la *Loi sur l'accès à l'information*

APPENDICES

1. LIST OF RELATED FACTORS.

2. VIOLATIONS, DEFICIENCIES AND IRREGULARITIES.

3. INVESTIGATION COST AND TIME DETAILS.

4. DIAGRAM OF ACCIDENT AREA. - - - - - - - - - - -
   (A) Map of Area 1:25,000
   (B) Survey Scatter Plot of Wreckage.
   (C) Sketch of Area Location of Witnesses.

5. PHOTOGRAPHS.

6. WITNESSES STATEMENTS (LIST BELOW) A, B, C, ETC.

s.19(1)

(A) Statement o[redacted]
(B) "
(C) "
(D) "
(E) "
(F) "

Statements of personnel other than direct eye-witnesses

(G) Statement of [redacted]
(H) "
(I) "
(J) "

7. CREW LIST (INCLUDE ADDRESS)

   DETAILS OF INJURIES.
   CORONER'S REPORT.

8. PASSENGER LIST (INCLUDE ADDRESS)

   DETAILS OF INJURIES.
   CORONER'S REPORT.

9. ADDITIONAL WEATHER INFORMATION (WHEN REQUIRED)

(LIST AND NUMBER ANY ADDITIONAL APPENDICES BELOW).

10. Engine examination report submitted by R.M.Logan, D.O.T.
11. Engine examination report subm itted by R. W. Hatch, Allison Representative
12. Aircraft examination report submitted by J.G. Baker, Fairchild Hiller Representative
13. Hydraulic component test report submitted by Master Instruments,Vancouver Airport
14. Chemical and serology analysis report submitted by RCMPolice Laboratory,Vancouver
15. Pathological report
16. R.C.M.Police report
17. Statement of fact to the Coroner
18. Correspondence to Fairchild Hiller
19. Correspondence to ADMA, Ottawa
20. Laboratory report No. 24/68
21. Correspondence to CAIE, Ottawa
22. Measurements of Blade Flap Angle by Okanagan Helicopters

Document disclosed under the *Access to Information Act*
Document divulgué en vertu de la *Loi sur l'accès à l'information*

PART 1 INTRODUCTION

ACCIDENT DETAILS

LOCATION	ALTITUDE A.S.L.	LATITUDE	LONGITUDE	DATE AND TIME (STANDARD)
Approx 5 miles east Fort Langley, B.C.	250'	49° 08' N	122° 28' W	March 14, 1968 Approx 11:58 PST

OPERATOR

Okanagan Helicopters Ltd.

EXTENT OF DAMAGE
DESTROYED [X] SUBSTANTIAL [ ] MINOR [ ] NIL [ ]

NUMBER OF CREW	NUMBER KILLED	NUMBER INJURED	
		SERIOUS	MINOR
One	One		

NUMBER OF PASSENGERS	NUMBER KILLED	NUMBER INJURED	
		SERIOUS	MINOR
None	None		

TYPE OF OPERATION	ATB LICENCE NUMBER UNDER WHICH OPERATION WAS BEING CARRIED OUT	CLASS OF SERVICE
3.3 Commercial (Ferry)	512/50 (H)	4 (ABC)

TYPE OF ACCIDENT

5.22 Airframe Air

PART 2 FACTS ASCERTAINED BY INVESTIGATION

AIRCRAFT

AIRCRAFT TYPE	REGISTRATION	MAKER'S SERIAL NO.
Hiller FH-1100	CF-WMO	96

REGISTERED OWNER
Okanagan Helicopters Ltd., Vancouver International Airport, B.C.

AIRCRAFT UNDERCARRIAGE
LANDPLANE [X] SEAPLANE [ ] SKIPLANE [ ] AMPHIBIAN [ ] SKI-WHEEL [ ] WHEEL-FLOAT [ ]

SEATING ARRANGEMENT

Two front, three rear

ENGINE AND PROPELLER *(for helicopters type in appropriate information on hubs, main rotors and tail rotors)*

NO.	ENGINE TYPE	MAKER'S SERIAL NO.
1	Allison 250-C18	CA - E800374
2		
3		
4		

NO.	PROPELLER TYPE	HUB MODEL AND SERIAL NO.	BLADE MODEL AND SERIAL NO.
1			
2			
3			
4			

HELICOPTERS

MAIN ROTOR HUB, SERIAL NO	65
MAIN ROTOR BLADES, SERIAL NO	316, 317
TAIL ROTOR HUB, SERIAL NO	58
TAIL ROTOR BLADES, SERIAL NO	416, 421

Document disclosed under the *Access to Information Act*
Document divulgué en vertu de la *Loi sur l'accès à l'information*

WRECKAGE

GENERAL OBSERVATIONS (GIVE DETAILS OF MARKS ON GROUND, CONDITION OF GROUND, POSITION OF WRECKAGE, RELEVANT MATTER PICKED UP AWAY FROM WRECKAGE, A WRECKAGE DIAGRAM SHOULD BE INCLUDED WHERE THE WRECKAGE IS SCATTERED)

The main body of the wreckage was located in a heavily wooded section of a farmyard situated on a bluff, 3 miles south of the Fraser River and approximately 5½ miles SE of Fort Langley, B.C. This bluff was at an elevation of 250' above sea level.

The major portion of the aircraft struck the ground in a near vertical attitude on an approximate heading of 065°m. The main rotor and hub assembly attached to the broken top section of the main rotor mast were located approximately 350' south of the impact area.

The remainder of the scattered wreckage, consisting of over 260 items in all, covered an area of about 10 acres on a bearing of 350°T from the main wreckage. Some papers from the cabin area were located on the same bearing over 1½ miles from the accident scene.

A map of the area and a scatter plot is attached as Appendix 4 (A) and 4 (B) respectively.

CONDITION OF WRECKAGE (DESCRIBE IN DETAIL)

The surveyed scatter plot showing the location of the wreckage is attached as Appendix 4(B).

UNDERCARRIAGE The right hand skid and struts were with the main wreckage. The front section of the skid had broken off at the front strut attachment point and had been driven into the ground in a near vertical attitude.

The left hand skid and struts were found as indicated in Appendix 4 (B). The rear strut was fractured at the mid-point by a main rotor blade strike. This strike occurred in an upward and outward direction from the helicopter under surface, fracturing the strut, upper strut attachment and rear torsion bar.

MAIN ROTOR The main rotor mast had fractured just below the teeter stops contact point. The mast showed slight ovaling at the fracture area and had been struck heavily by the teeter stops. The complete main rotor head, blades and section of mast were located as shown in Appendix 4 (B). The blue blade had very little damage but had a negative coning bend out toward the tip. The yellow blade was extensively damaged from metal and tree strikes and was twisted and bent downward at the tip. Both incidence pushrods had fractured, one rod was lying with the head, and the other rod was with the main wreckage. The blue blade drag link attachment bolt had sheared at the threaded end and pulled loose from the blade. The blade had rotated forward in the grip and struck the leading edge of the blade on the grip face.

ENGINE & TRANSMISSION The engine was extensively damaged by fire. The accessory gearbox case was broken. The mounts were broken in several places but the engine was being held in position by the controls, plumbing and electrical wiring.

The transmission was still in position. The lower case and accessory drive case, hydraulic pumps, and plumbing, were damaged by fire and impact. The flight controls were still intact from the engine compartment deck up to the top side of the swash plate. The hydraulic cylinders were fire scorched but appeared undamaged. The transmission input one-way clutch and drive quill had been forced forward into the case.

CABIN & FUSELAGE had been destroyed by impact and fire. The fuselage below the engine compartment and all controls were also destroyed by fire.

TAIL BOOM & ROTOR The tail boom was severed just aft of the attachment bulkhead and was lying a short distance from the main wreckage. The tail rotor pylon was severed from the tail boom and this section, including the tail rotor gearbox and tail rotor, were located with the main wreckage. The tail rotor blades were severed just outboard from the root.

Document disclosed under the *Access to Information Act*
Document divulgué en vertu de la *Loi sur l'accès à l'information*

ends. The outer sections of the tail rotor blades were found as shown in Appendix 4 (B)

Miscellaneous pieces of the helicopter radio, instruments, structure, etc., were located as shown in Appendix 4 (B) and Appendix 5.

Document disclosed under the *Access to Information Act*
Document divulgué en vertu de la *Loi sur l'accès à l'information*

WRECKAGE (Continued)

TECHNICAL EXAMINATION OF WRECKAGE (LIST AND REMARK UPON ANY TECHNICAL DEFECTS IN AIRFRAME, ENGINE(S) OR ACCESSORIES, DISCOVERED DURING INVESTIGATION; IF NOTED INCLUDE DETAILS OF OPERATING LIFE AND TIME SINCE MANUFACTURE AND OVERHAUL)

A survey plot was made of the wreckage area giving locations of main and scattered wreckage and is attached as Appendix 4 (B). The wreckage was then transported to Vancouver Airport for examination and a mock-up of the helicopter fuselage was constructed to determine the sequence of break-up. All systems, components, and structure were examined, where possible, for evidence of failure prior to the initial break-up, and ground impact and fire damage. Chemical and serology examinations were conducted by the RCMPolice Laboratory, Vancouver, to determine if there had been any bird or foreign object strikes, and where possible the location of rotor blade strikes in relation to the helicopter structure. The results of the examinations are:

1. POWERPLANT: The engine was dismantled and examined as shown in the appendices #10 and #11. No preimpact failures were found. Internal evidence indicates that the engine was still developing power at impact, however, the percentage of power could not be established.

2. INSTRUMENTS: The volt-ammeter, oil temperature, exhaust temperature, gas generator tachometer, dual tachometer and altimeter were examined as shown in Appendix #20 and it is concluded from the engine instruments that the engine was still developing power at impact.

3. MAIN ROTOR SHAFT: Metallurgical examination of the shaft failure was carried out as shown in Appendix #20. No defects were found but the shaft had been subjected to a bending overload coupled with a torsional load. Evidence indicates that the shaft was driving the main rotor at the time of failure.

4. VERTICAL FIN AND TAIL ROTOR BLADE FAILURE: Examination of the fin and tail rotor blades as shown in Appendix #20, showed no defects. The failure resulted from excessive flapping and possible bending of the tail rotor blades which caused the rotor tips to strike the fin leading edge.

5. FLIGHT CONTROLS & HYDRAULIC SYSTEM: All systems had extreme fire damage. The flight controls above the engine deck to the swash plate were intact except for impact damage. The incidence pushrods between the swash plate and main rotor had been intact until after the main rotor shaft failure. Evidence of flattening and marks on the pushrods and main rotor shaft showed that the pushrods failed as they were twisted around the rotor shaft. Also, following the shaft failure the rotor hub had lifted and was then brought down again marking the yellow blade teeter stop by the fractured end of the rotor shaft. This downward movement

. . . 6 (A)

TECHNICAL INVESTIGATION AND TESTS (GIVE DETAILS)

Included in above.

000012

Document disclosed under the *Access to Information Act*
Document divulgué en vertu de la *Loi sur l'accès à l'information*

TECHNICAL EXAMINATION & INVESTIGATION - Continued from Page 6

of the hub and rotor following the shaft failure was most likely caused by negative blade angle from the pushrods still being attached to the swash plate.

The flight control rods and bellcranks below the engine deck and forward to the cockpit controls had been destroyed by fire. However, all control rod ends with small sections of pushrod still attached and bellcrank hinge bearings were accounted for. There was no evidence of failure of the rod ends or hinge points. The fore and aft and the lateral pitch trim actuators were badly damaged by impact and fire, but showed no evidence of malfunction. The hydraulic control power cylinders had impact damage and some slight fire damage. The cylinders were bench checked for operation as shown in Appendic #13, and were found to operate normally. Both hydraulic power packs were badly damaged by fire and could not be bench checked. Visual examination showed no evidence of pre-impact failure.

6. TRANSMISSION: Examination of the transmission and disassembly showed all gears and drives to be normal, except for impact damage. The oneway drive showed no evidence of pre-impact failure.

7. TAIL ROTOR GEARBOX & PITCH CHANGE MECHANISM: Except for a bent tail rotor shaft, the gearbox was intact. The bent shaft had to be cut in order to dismantle and examine the drives and pitch change mechanism. Examination showed no evidence of failure or malfunction prior to impact.

8. FUSELAGE & UNDERCARRIAGE: The main cabin area and lower rear fuselage below the engine deck was almost completely destroyed by fire. A mock-up was built from the recovered pieces and examined for rotor blade strikes and possible failures prior to the aerial disintegration. This examination showed a rotor blade strike; on the windshield bow about 8" to the right of the centre line; on the single side band radio and grill on top of the instrument console; on the right front corner of the battery and battery quick disconnect; and the right hand rudder pedal. These strikes all appeared to be inwards and down. A further strike had occurred to the left undercarriage rear support strut about 12" from the torque tube. This strike was from below the helicopter and from the centre line outwards toward the left as viewed with the helicopter in a normal upright position. There was no evidence of blade strikes on the tail boom or rear fuselage. The tail boom separated from the main fuselage during ground impact in a near vertical nose down attitude.

9. MAIN ROTOR: Examination of the main rotor head and blades showed no evidence of pre-strike failure. Chemical laboratory examination of the damaged rotor blade was carried out to determine, where possible, if a bird strike had occurred, and to locate the damaged areas of the blade in relation to strikes on the helicopter structure. The results of this examination are shown in Appendix #14. The main rotor hub and teeter stop flapping travel was measured by using a serviceable rotor shaft. From neutral to down stop on Blue blade measured 9½°. From neutral to down stop on Yellow blade measured 9°. Hiller aircraft specifications for blade flap angle are neutral to down 10° plus 30' minus zero. A check carried out by the Okanagan Helicopters Ltd., Vancouver, on other Hiller FH-1100 helicopters revealed that the majority of the helicopters had less travel than specified. See Appendix #22.

10. WINDSHIELD: Ballistics examination of some pieces of perspex were carried out with negative results. One piece of windshield perspex with a blood stain was examined as shown in Appendix #10. This stain was identified as human blood, group "O".

All the available evidence indicates that the helicopter had been serviceable and functioning normally prior to the main rotor flapping and fracturing the main rotor shaft.

An estimated weight and balance shows that the helicopter was being operated within limits but with an aft Centre of Gravity at about 101.0" Normal operating C of G limits are 95.5" to 101.5".

Document disclosed under the *Access to Information Act*
Document divulgué en vertu de la *Loi sur l'accès à l'information*

CREW

NAME	AGE	NAME	AGE
Par Frederick Raymond Fletcher	41		
DUTY		**DUTY**	
Pilot-in-Command			
TYPE OF LICENCE		**TYPE OF LICENCE**	
Airline Transport VRA-1078			
AIRCRAFT CLASS AND TYPE RATINGS		**AIRCRAFT TYPE AND CLASS RATINGS**	
Aeroplanes, single and multi-engine land and sea and helicopter			
INSTRUMENT RATING / **DATE OF LAST CHECK**		**INSTRUMENT RATING** / **DATE OF LAST CHECK**	
Class I / Jan.22,1968			
INSTRUCTORS RATING / **DATE OF LAST CHECK**		**INSTRUCTORS RATING** / **DATE OF LAST CHECK**	
Class III , / -			
AIRCRAFT TYPES FLOWN		**AIRCRAFT TYPES FLOWN**	
Piper - Apache, Commanche, Aztec C, Colt, Clipper Piper - Tri-Pacer, J3, Super Cub, Super Cruiser, Cherokee Cessna - 120, 140, 150, 170, 172, 175, 180, 206, 210 DeHavilland - Beaver, Otter, Dove Lockheed 18 - Loadstar Fleet 80 Taylorcraft Stinson Voyageur Aeronca Champ Beech 18 Bell 47, 206 Hiller UH12, FH 1100			
TIME ON ACCIDENT TYPE / **TIME ON TYPE WITHIN PAST 90 DAYS**		**TIME ON ACCIDENT TYPE** / **TIME ON TYPE WITHIN PAST 90 DAYS**	
110 hrs / 52 hrs			
TOTAL TIME WITHIN PAST 90 DAYS / **GRAND TOTAL**		**TOTAL TIME WITHIN PAST 90 DAYS** / **GRAND TOTAL**	
150 hrs. / 4293 hrs			

SUB-DIVIDE INTO PILOT-IN-COMMAND AND CO-PILOT, DAY/NIGHT AS NECESSARY, WHEN ACCIDENT INVOLVES A SKIPLANE, FLOAT PLANE, HELICOPTER OR GLIDER, A SUITABLE BREAKDOWN OF THE PILOT'S EXPERIENCE MUST BE PROVIDED. IN CASES OF HELICOPTER ACCIDENTS GIVE TOTAL TIME ON HELICOPTER AS WELL AS EXPERIENCE ON SPECIFIC TYPE OF HELICOPTER.

Total fixed wing flying time - 2548 hrs.
" rotary wing " " - 1745 hrs.

All times as taken from Pilot*s personal papers found i n the wreckage area.

HISTORY OF CREW MEMBERS CONCERNED WITH ACCIDENT. (GIVE FULL DETAILS OF TRAINING, TOTAL AND RECENT EXPERIENCE; WHERE ACCIDENT INVOLVES SPECIAL CIRCUMSTANCES, SUCH AS NIGHT OR INSTRUMENT FLYING, GIVE FULL DETAILS OF EXPERIENCE OF RELEVANT CREW MEMBERS IN THIS REGARD AND GIVE DETAILS OF ANY PREVIOUS ACCIDENTS.)

See Page 7 (B)

WEATHER (Use plain language, not Met. Symbols)

CEILING OR CLOUD CONDITION	VISIBILITY	TEMPERATURE
1500 to 2000' overcast	Good - occasional showers in area	42° F

DEW POINT	WIND VELOCITY	ALTIMETER SETTING	CLOUD TYPES
Unknown	SSE 20 gusting 25 MPH	Unknown	Strato-cumulus

PAGE 7A TO BE COMPLETED WHEN WEATHER WAS A FACTOR.

Document disclosed under the *Access to Information Act*
Document divulgué en vertu de la *Loi sur l'accès à l'information*

THIS PAGE TO BE COMPLETED WHEN WEATHER WAS A FACTOR IN THE ACCIDENT. THE WEATHER TO BE DISCUSSED AND INFORMATION TO BE PROVIDED UNDER THE FOLLOWING HEADINGS:

A) DID THE PILOT OBTAIN WEATHER INFORMATION?

B) IF YES, WHAT WAS THE SOURCE AND WHAT INFORMATION WAS PROVIDED?

C) WEATHER FORECAST FOR THE APPROPRIATE PERIOD, BOTH AREA AND TERMINAL.

D) AN OFFICIAL METEOROLOGICAL AFTERCAST OF THE ACTUAL WEATHER CONDITIONS OVER THE ROUTE OF THE FLIGHT.

E) CONDITIONS WHICH MIGHT PRODUCE ICING (CARBURETTOR OR AIRFRAME).

F) CONDITIONS WHICH MIGHT PRODUCE TURBULENCE.

NOTE: THE FOLLOWING MATERIAL IS TO BE ATTACHED AS APPENDIX 9.

APPROPRIATE FORECASTS, OBSERVATIONS AND SYNOPTIC CHARTS AND VERTICAL CROSS-SECTION SHOWING THE POSITION OF FRONTS AT THE TIME OF THE ACCIDENT.

A) Unknown.

B) Unknown.

C) The forecast for the Vancouver area issued at 17:30Z on the 14th is as follows:

PROGNOSIS - A defused arctic front is quasistationary in a line south of Calgary - near Kamloops - West of Smithers, at 1800Z. A low, centred 175 miles west of Tofino at 1800Z is moving northeastward and will be just west of Spring Island by 0600Z and is filling. The airmass is moist and unstable becoming stable north of the arctic front.

CLOUDS & WEATHER - A scattered layer based at 1000 ft and topped at 2000 ft. A second layer of strato cumulus and heavy cumulus cloud based at 2000 to 3000 ft and topped at 6000 to 12000 ft. A third layer based at 9000 ft and topped at 12000 ft. Visibility occasionally 2 to 4 miles in rainshowers with a few heavy cumulus topped at 15000 along the coastal mountains. Mountain passes frequently obscured ½ to 1 mile in light snow showers. Surface winds from 130°m at 25 MPH with gusts in the exposed areas.

ICING - Light rime icing except moderate clear icing in the heavy cumulus. Freezing level 3500 ft.

TURBULENCE - Moderate near heavy cumulus.

ACTUAL WEATHER REPORTS - for 1900Z and 2000Z

1900Z - Abbotsford - Special. Estimated ceiling 2000 ft broken 4000 ft broken, 20 miles visibility in very light rain showers, barometric pressure 1008.8 mlbs, temperature 47°, dewpoint 39°F, wind from 170° at 14 MPH. Altimeter setting 29.78" Hg, 8/10 heavy cumulus, 1/10 strato cumulus.

2000Z - Abbotsford - 1500 ft scattered, estimated 2000 ft broken, 4000 ft overcast. Visibility 15 miles in very light rainshowers. Barometric pressure 1009.5 mlbs. Temperature 46°F , dewpoint 37°F, wind from 190 at 18 MPH. Altimeter setting 29.80 inches, 2/10 cumulo fractus, 5/10 heavy cumulus, 3/10 strato.

D) There were no fronts in the area, but a deep low pressure area centered about 300 miles west of Vancouver Island, had produced a fairly brisk southwesterly flow of moist unstable air over southwestern B.C. This airstream given additional orographic lift over the coast mountains produced extensive cumulus and heavy cumulus clouds with tops 12 to 14000 ft and occasional showers.

E) Not pertinent.

F) Flight in or near the vicinity of the heavy cumulus type cloud could have encountered moderate turbulence also with a surface wind as reported by Abbotsford of 18 MPH with gusts light to moderate, mechanical turbulence would be generated in the vicinity of uneven terrain.

Further to this, it may be noted that an investigator was at the time of the accident, situated in a light aircraft enroute toward Abbotsford Airport, approximately 4 miles south of the accident site, at 1500 ft above ground, and was experiencing moderate turbulence with occasional severe jolts during the flight from Langley, B.C.

Document disclosed under the *Access to Information Act*
Document divulgué en vertu de la *Loi sur l'accès à l'information*

PILOT HISTORY

Par Fredrick Raymond Fletcher

1. Initial medical examination completed April 15/48, assessed A1.

2. Completed training with the Canadian Aircraft Co., and the Regina Flying Club, with a toral flying time of 13:10 dual and 12:20 solo, August 1948.

3. All examinations completed August 3/48, assessed passed.

4. Issued Private Pilot Certificate No.7400 Aug.3/48, valid for DH 82 Taylor Cub and Piper type aircraft.

5. Licence endorsed for Fleet 80 and Cessna 120 type aircraft Dec.9/48.

6. Involved in an accident, as Pilot-in-Command, of Aeronca aircraft CF-FMU on March 5/50. Pilot received serious injuries, one passenger killed.

7. Licence re-instated after successful completion of another flight test and written examination on Air Regulations, June 23/51

8. Enrolled with the Regina Flying Club Aug.18/51, to undertake an approved course of Commercial Pilot training. Total flying experience 111:15 hrs.

9. Private Pilot Certificate endorsed "valid for night flying" Sept.8/51.

10. Completed Commercial Course on Oct.10/51. Total flying hours on course 55:30 hrs.

11. Completed Commercial Pilot Flight test Oct.11/51, assessed passed.

12. Completed Commercial examinations with the following results:

CP1	84%	CP5	82%
CP2	88%	CP6	86%
CP3	69%		

13. Issued Commercial Pilot Licence #C5872 on October 30/51, valid for Aeroplanes, single engine land.

14. Completed Flying Instructor's Categorization flight test June 29,1955, passed, awarded Category III.

15. Attempted Senior Commercial exam SAIA - failed, 58%, Feb.19/57

16. Attempted Instructors written exam FI1 part II, passed - 86%, May 25/61.

17. Completed a conversion course to Seaplanes, licence endorsed, Nov.9/62.

18. Completed conversion course to multi-engine aircraft, Dec.20/62 - licence endorsed.

19. Completed Helicopter endorsement exam HE1, March 9/65, passed 72%.

20. Completed conversion course to Helicopters March 30/65, consisting of 25 hrs of flight instruction. Licence #C5872 endorsed to include Bell 47 series helicopters.

21. Completed type training on Hiller 12E helicopters, licence endorsed for Hiller 12E May 6/65.

22. Involved in an Accident as Pilot-in-Command of Bell 47G3B helicopter CF-OKU on March 15/66. Pilot seriously injured. Aircraft struck an unmarked power line and crashed into river.

23. Completed a practical flight test with DOT Inspector,following accident, Oct.28/66 - passed.

24. Medical examination report dated Aug.3/66, assessment withheld pending further review.

000016

Document disclosed under the *Access to Information Act*
Document divulgué en vertu de la *Loi sur l'accès à l'information*

PILOT HISTORY continued

25. Medical report assessed 1,1,1,1, Oct.28/66.

26. Attempted written exams for Senior Commercial Licence with the following results:

SA1D	- passed	84%
SA2A	- passed	87%
SA3	- passed	70%
SA4	- passed	88%
SA6C	- passed	86.4%
SA7C	- passed	83.3%

27. Issued Senior Commercial licence #VRS 663 valid for Aeroplanes single and multi-engine land and sea and helicopters Bell 47, Hiller UH12, Jan.23/67.

28. Attempted Instrument Rating exam IR-1, passed 78% Aug.16/67.

29. Completed training for issuance of Glider licence Sept.10/67.

30. Issued Glider Licence #VRG 168 Sept.18/67.

31. Completed conversion course to Hiller FH1100, licence endorsed Feb.2/68.

32. Attempted Instrument flight test January 5/68, assessed - failed.

33. Re-attempted flight test Jan.22/68 - awarded Class I rating.

34. Issued Airline Transport Licence #VRA 1078 Jan22/68. Total flying experience 3829:35 hrs.

35. Completed conversion course to Bell 206 helicopters - licence endorsed Feb7/68.

36. No further record of any infractions, violations, accidents or incidents on file.

Document disclosed under the *Access to Information Act*
Document divulgué en vertu de la *Loi sur l'accès à l'information*

NAVIGATION AIDS

SPECIFY AIDS AVAILABLE ON THIS FLIGHT

L.F.Range
ADF

SPECIFY AIDS FITTED TO AIRCRAFT

VHF Radio

AIDS USED AND THEIR EFFECTIVENESS

VHF radio used by pilot to pass position report by Ladner.

MAPS, RADIO FACILITY CHARTS, ETC., ON BOARD AIRCRAFT

Suitable maps for the area were on board the helicopter.

AIR TRAFFIC CONTROL AND COMMUNICATIONS

DATA ON COMMUNICATIONS AND THEIR FUNCTIONING. (EXTRACTS FROM RADIO LOGS OR RECORDINGS AS APPROPRIATE.)

Not pertinent.

TYPE OF FLIGHT CONTROL

NONE [X] CONTROL TOWER [ ] TERMINAL CONTROL [ ] CENTRE CONTROL [ ] COMPANY ONLY [ ]

TYPE OF CLEARANCE

NONE [X] VFR [ ] IFR [ ] SPECIAL VFR [ ] DVFR [ ] CONTROLLED VFR [ ] OTHER [ ]

AIR TRAFFIC CONTROL INSTRUCTIONS ISSUED AND RECEIVED

Not pertinent.

AIR TRAFFIC CONTROL CLEARANCES ISSUED AND ACCEPTED

None.

WAS FLIGHT PLAN OR FLIGHT NOTIFICATION FILED? IF YES, INDICATE HOW FILED, WHERE AND DETAILS PROVIDED.

No - Company aware of flight and destination.

FIRE FIGHTING EQUIPMENT

AIRCRAFT — WAS THERE ANY FIRE?

YES [X] NO [ ] IN AIR [ ] ON GROUND [ ]

IF YES, THE FOLLOWING INFORMATION IS TO BE PROVIDED.
WHAT CAUSED THE FIRE?

Possible heat from engine or electrical sparks ignited fuel from ruptured fuel cell on impact.

WHAT TYPE OF EXTINGUISHING SYSTEM WAS INSTALLED IN THE AIRCRAFT?

Hand portable.

SPECIFY TYPE OF EXTINGUISHING AGENT.

Dry chemical.

PORTABLE [X] ONE SHOT [ ] TWO SHOT [ ] THREE SHOT [ ]

Document disclosed under the *Access to Information Act*
Document divulgué en vertu de la *Loi sur l'accès à l'information*

FIRE FIGHTING EQUIPMENT (Continued)

WAS THE FIRE EXTINGUISHING SYSTEM USED? IF SO, GIVE DETAILS.

No.

GROUND – FIRE FIGHTING OR CRASH EQUIPMENT USED AND ITS EFFECTIVENESS.

None used or available

HOW LONG DID IT TAKE RESCUE, FIRE AND MEDICAL SERVICES TO REACH THE SCENE? STATE ANY FACTORS INVOLVED WITH COMMENT ON TIME INTERVAL.

RCMP on the scene within 15 minutes.

WATER OPERATIONS

FOR ACCIDENTS ON WATER INVOLVING AIRCRAFT WHICH ARE REQUIRED BY LAW TO CARRY LIFE JACKETS AND/OR RAFTS, PROVIDE INFORMATION ON THEIR USE AND EFFECTIVENESS.

Not applicable.

ACCIDENT AREA

DETAILS OF THE ACCIDENT AREA AND ITS LOCATION ARE TO BE GIVEN, A SKETCH SHOULD BE INCLUDED AS APPENDIX 4. WHEN THE ACCIDENT OCCURS ON AN AERODROME, LICENCED OR UNLICENCED, GIVE DESCRIPTION OF INSTALLATIONS, LENGTH OF RUNWAYS USED AND CONDITION. COMPLETE INFORMATION OF ANY AREA USED FOR TAKE-OFF OR LANDING MUST BE PROVIDED.

The accident occurred at an elevation of 260' ASL on the top of a ridge in an area known locally as Jackman Hill, approximately 3 miles south of the Fraser River and 5 miles north of the townsite of Aldergrove, B.C. The ridge is completely covered by trees and brush, with the trees averaging 80 to 100 ft in height.

Approximately 600 yds north of the accident site the contour of the land drops sharply to join the Fraser River lowlands at an elevation of 60 to 70 ft ASL.

A map and sketch of the area is attached as Appendix 4 (A) and 4 (B) respectively.

Document disclosed under the *Access to Information Act*
Document divulgué en vertu de la *Loi sur l'accès à l'information*

PART 3 EXAMINATION OF EVIDENCE

RECONSTRUCTION OF FLIGHT AND SUMMARY OF EVENTS (INCLUDE TIME, DATE AND PLACE OF TAKE-OFF AND PROPOSED DESTINATION(S).

The pilot, alone on board Hiller FH 1100 CF-WMO, departed V ancouver Airport at approximately 11:45 PST, on March 14, 1968, to proceed to Ruby Creek, B.C. The aircraft was required in this area to replace another helicopter which was involved in an accident earlier on the same day.

After take-off, the pilot passed a position report that he was by Ladner and indicated that he would call and report by Langley. There were no apparent indications of any malfunctions or irregularities at this time.

Further along the flight path the aircraft was observed by a Mr. Roy Hepworth, who is also an FH 1100 pilot, to be flying in a west to east direction at an approximate elevation of 500 ft. He states that the helicopter was moving at a fairly fast cruising speed in view of an apparent 10 - 20 MPH southeast wind, and that the helicopter was encountering turbulence as the blades would make the occasional slapping sound.

Shortly thereafter the helicopter was observed, by a number of witnesses, to apparently disintegrate and fall towards the ground in a steep nose down attitude into the trees on Jackman Hill.

The aircraft exploded on impact and was destroyed. The pilot was killed.

Document disclosed under the *Access to Information Act*
Document divulgué en vertu de la *Loi sur l'accès à l'information*

DISCUSSION OF EVIDENCE

The helicopter had reported leaving Vancouver Airport at about 11:45 PST on March 14,1968. The accident occurred at about 11:58 PST or a few minutes earlier as indicated by the time at which the RCMPolice Detachment were notified. The distance, Vancouver to accident site, on a straight track of 095°T is about 32 miles. The wind estimated 193°T at 20 MPH. Using the elapsed time of 13 minutes, the straight track distance 32 miles and the wind of 193° at 20 MPH, calculations showed a ground speed of 148 MPH and an airspeed of 147 MPH. The FAA type specifications H2WE for FH-1100 shows a V n e of 127 MPH on skid gear.

As the above calculations cannot be accepted as being too accurate, it can only be assumed that the helicopter was being operated at or near its V n e (maximum speed) during the flight between Vancouver Airport and the accident site.

General weather information indicates that moderate turbulence could be expected in the vicinity of heavy cumulus clouds. An instructor from the Fort Langley Seaplane School located about 3½ miles NW of the accident site, stated that he had carried out a check flight at about 10:00 PST and had experienced moderate to extreme turbulence in the Fort Langley area. He had then cancelled all float flying. Flying recommenced at the floatplane base at 16:00 and that light to moderate turbulence was encounted in the circuit area. This instructor has also instructed on sailplanes in this area and he further states that "This particular area, where the crash occurred, can be depended upon to produce turbulence at any time of the daylight hours, which is capitalized on by glider or sailplane pilots during the soaring season.

Other persons in a light aircraft arrived over the accident site about 10 to 15 minutes after the accident occurred. They indicate that turbulence in the area was moderate to occasionally heavy.

Attempts carried out by the National Research Council Laboratory, to duplicate conditions at the scene, by using a scale model of the accident area in a water tunnel, has proved inconclusive.

Several witnesses located near the accident site saw and heard the helicopter. The majority indicate the direction of flight as being from west to east. Two witnesses appear to have the directions reversed.

Estimates of the height at which the helicopter was seen above the trees varies from 75 to 200'. The helicopter was seen flying straight and level and suddenly a large object flew off the top and the helicopter started to fall in a sharp nose down angle toward the trees. One witness heard a rolling hammering noise, which he states he had heard before when helicopters make a turn, followed by a sharp metallic crack. Others heard a loud sharp crack, others a bang, preceding the descent of the helicopter. The majority of witnesses describe the helicopter as going almost straight down in a sharp nose down angle. One witness stated that he saw the helicopter tumbling end over end toward the ground. One other witness states that the helicopter seemed to be going west toward Vancouver, it was flying straight and level when there was a loud sharp crack and a long object flew off the top. The helicopter made a sharp right turn toward the north, tilted over on its side and headed down, nose first, at about an 80° angle. This statement, if the direction of flight was reversed, would be fairly consistent with what might be expected to happen following loss of the main rotor.

Examination of the helicopter parts not consumed by fire including engine and controls, determined that there was no evidence of failure or malfunction prior to the loss of the main rotor.

. . . Page 11(A)

SUMMATION

While in level cruise flight the helicopters main rotor mast failed due to an overstress condition caused by severe flapping. The aircraft pitched forward and struck the ground in a near vertical, nose down, attitude.

Document disclosed under the *Access to Information Act*
Document divulgué en vertu de la *Loi sur l'accès à l'information*

rotor. The engine was developing power when the main rotor shaft failed, and was still running at impact. Metallurgical examination of the failed main rotor shaft indicates that there were no material defects. The shaft had been subjected to a bending overload coupled with a torsional load.

Examination of the main rotor showed the blue blade to be undamaged except for a negative coning toward the tip. Part of this bending may have occurred at impact with the ground. The tip of the blade was resting on a moss and grass covered root area at the base of a small tree. The hub and remainder of the blade was in a soft mud and water covered area with the hub buried about level with the surface. The yellow blade was twisted and torn with evidence of several strikes on the leading edge and both surfaces. This blade was examined using chemical composition analysis of particles to determine which blade areas had struck specific components of the helicopter, also to determine if the rotor may have struck a bird or other foreign object. No evidence indicating a bird strike was found and foreign object strikes are considered improbable. Three strike areas were identified; one, at Area "B" on the blade contacting the battery quick disconnect; second, at Area "D" on the blade contacting the single-side-band radio grill cover; third, at the blade tip lower surface had contacted the right hand rudder pedal horizontal foot rest.

The battery and connector, and radio grill, had been struck in a downward direction. The rudder pedal appeared to have been struck with the blade descending in a flat angle onto the pedal.

A further blade strike was evident on the left rear undercarriage strut with the strike being from below and behind the strut in an outward direction. The location on the blade causing this strike, could not be identified. Examination of the rotor hub, shaft, and incidence control rods showed that the shaft had been struck several times by the teeter stops; the shaft failed allowing the hub and rotor to slow down in relation to the lower shaft and swashplate thereby wrapping the incidence control rods around the shaft and marking it before both rods also failed. A mark on the lower surface of the yellow blade teeter stop indicates that following the shaft failure the hub may have lifted up changed the incidence to the blades through the still connected incidence rods causing the hub to descend striking the fractured end of the shaft against the teeter stop. A subsequent check of the hub teeter stops showed that the rotor flapping angle travel was below the minimum travel as specified by the manufacturer.

Ballistic examination of several areas of recovered perspex were negative, also nitrate tests. Analysis of a suspected blood spot on a piece of perspex confirmed it to be human blood.

Examination and tests showed no evidence of control or hydraulic system failure or malfunction. Tail rotor strikes and blade failure were caused by excessive flapping and bending of the blades following the main rotor shaft failure. A trajectory analysis conducted by Headquarters Engineering Laboratory, established the helicopter to be about 475' above ground when the shaft failure occurred.

Information obtained from a pilot in the Pacific Region, indicates that when he was operating at about 120 MPH he lowered the collective control quite rapidly to go into autorotation in order to make a fast letdown into a mountain valley. The helicopter immediately pitched nose down about 20-30° with a rapid buildup of speed. Recovery was affected by keeping the cyclic pitch in its original position and increasing collective pitch.

Data from flight performance analysis test conducted by the manufacturer on this type of helicopter is not available for use in determining the cause of the accident. However, hearsay information obtained from other sources indicates that this type of helicopter will pitch nose down excessively, following a rapid movement of the collective control toward low pitch, when the helicopter is being operated at high speed, causing the main rotor to flap close to its maximum limits. Also, that operation of the helicopter with a light load and aft C of G position will create the most adverse flapping conditions. It was also felt that the extended horizontal stabilizer adds to the instability in the above conditions.

CONCLUSIONS

1. The pilot had a valid Airline Transport Licence and had acquired a total of 4293:00 hrs of which 1745:00 hrs had been on rotary wing aircraft. He had flown 110:00 hrs on the type, of which 52:00 hrs had been in the past 90 days. He had flown a total of 150:00 hrs in the past 90 days and is considered competent to have conducted the flight.

2. The physical evidence and tests carried out showed no evidence of failure or malfunction of the helicopter prior to the teeter stops striking the main rotor shaft. Examination of the teeter stops and rotor flapping angle travel indicate that the travel was restricted to less than the minimums allowable as specified by the manufacturer.

. . . Page 11(B)

Document disclosed under the *Access to Information Act*
Document divulgué en vertu de la *Loi sur l'accès à l'information*

3. Moderate to severe turbulence was present in the area, as experienced by other aircraft prior to and immediately following the accident.

4. The helicopter has been found to be unstable during rapid collective control movements at high cruise speeds.

5. Examination of other FH-1100 helicopters by Okanagan Helicopters Ltd., indicates that the manufacturer has not ensured that the specified teeter stop angular dimensions have been within tolerances. Also, that the specifications were not made available to the operators prior to the accident.

6. Information on the accident flight indicates that the helicopter was being operated at close to maximum cruise speed, lightly loaded, and with an aft C of G position.

In summation it is concluded that the helicopter was being operated at close to maximum cruise speed, lightly loaded with an aft positioned C of G, in moderate to severe turbulence, and that the main rotor flapping travel was below the manufacturers specified limits. The pilot in encountering severe turbulence would have attempted to reduce his forward speed by lowering the collective control reducing power and pitch. The severity of the turbulence would govern the speed of his reactions and may have caused involuntary movement of the control at the same time. The helicopter would pitch nose down, and being close to the terrain, the pilot would spontaneously apply aft cyclic control to correct his attitude. These rapid movements combined with turbulence and below minimum flapping angle travel caused the teeter stop to strike and fracture the mast. One other probability which cannot be ruled out is that the helicopter encountered severe turbulence at high cruise speed causing the main rotor to flap beyond the available limits and fracture the mast.

SEQUENCE OF BREAKUP

Physical evidence of marks on the main rotor hub, teeter stops, mast and incidence rods, indicate that the main rotor mast failed due to excessive flapping. Following the mast failure the main rotor yellow blade struck the forward fuselage about 8" to the right of the centre line in a downward direction into the battery, radio and instrument console area. The direction and location of strike marks indicate only one blade strike in the forward fuselage and that the mast was fractured prior to the strike. A further blade strike was evident on the left hand rear undercarriage strut which had occurred from being struck from below the helicopter. Tail rotor strikes on the rear pylon indicate excessive flapping of the tail rotor blades caused by a swinging of the fuselage body following loss of the main rotor. Successive fuselage breakup occurred following the rotor strikes as the fuselage fell towards the ground. The fuselage struck the ground in a near vertical nosedown attitude and burned.

Document disclosed under the *Access to Information Act*
Document divulgué en vertu de la *Loi sur l'accès à l'information*

PART 4 CONCLUSION

PROBABLE CAUSE(S)

PRIMARY

6.4.4. Helicopter main rotor mast failure.

6.8.9. Turbulence in flight.

6.10.4 Manufacturer: Inadequate inspection following assembly, or instructions to operators of design specifications. ?

RECOMMENDATIONS

It is recommended that Headquarters conduct an investigation in conjunction with Department of Justice, to establish a procedure of obtaining all information on specifications, tests, etc., from manufacturers, and/or other establishments, pertinent to the investigation of aircraft accidents. That this information, if proprietary, could be used in the investigation if necessary to determine the probable cause of the accident. If used, Headquarters may then request that the accident report, or portions thereof, be privileged.

NOTIFICATION

DATE	TIME	METHOD OF NOTIFICATION
March 14, 1969	13:30 PST	Vancouver RCC - by phone.

24 June 1969 — DATE — INVESTIGATOR

June 25 1969 — DATE — INVESTIGATOR

DATE — INVESTIGATOR

Reviewed and Recommended for Approval:

25 June 69 — DATE — REGIONAL SUPERINTENDENT ACCIDENT INVESTIGATION

Approved:

July 11/69 — DATE — REGIONAL CONTROLLER CIVIL AVIATION

Document disclosed under the *Access to Information Act*
Document divulgué en vertu de la *Loi sur l'accès à l'information*

APPENDIX I

RELATED FACTORS

0	SEAT BELT FAILED		0	EXCEED MAX. PERM. X-WIND COMP.	
1	SEAT BELT NOT USED		1	EXCEED MAXIMUM GROSS	
3	SHOULDER HARNESS USED		3	EXCEED T.O. GROSS	
5	SHOULDER HARNESS INSTALL - NOT USED		5	EXCEED LANDING GROSS	
7	SEAT BELT SIGN ON		7	IMPROPER C.G.	
9	SEAT BELT SIGN OFF		9	ACCIDENT IN WATER	
0	OXYGEN USED		0	FIRE AFTER IMPACT	X
1	OXYGEN NOT USED		1	FIRE CRASH CREWS	
3	SUN GLARE		3	DITCHING	
5	SMOKE IN COCKPIT		5	AIRPORT/AERODROME HAZARD	
7	FOGGING WINDSHIELD		7	RADIO MAINTENANCE	
9	RESTRICT, WINDSHIELD		9	ICE-FROST ON ACFT SURFACES	
0	S.W.I. INSTALL - OPER		0	NUMBER OCCUPANTS EVACUATED (Deceased)	1
1	FLIGHT RECORDER		1	FAILURE SEAT-TIE DOWN	
3	AUTO-PILOT		3	COCKPIT DESIGN	
5	GUST LOCKS		5	COCKPIT LIGHTING	
7	CROSSWIND GEAR		7	VIOLATION	
9	ANTI-COLLISION LIGHT		9		
0	PILOT WAIVER		0	AUTOPSY (YES)	X
1	PILOT FATIGUE		1	AUTOPSY REQUESTED (YES)	X
3	PILOT PHYSICAL HANDICAP		3	AIRBORNE RADAR (WX) (YES)	
5	CREW TRAIN, DEFICIENCY		5	HIGH INTENSITY LIGHTING (YES)	
7	LACK CREW CO-ORDINATION		7	STOLEN AIRCRAFT	
9	JET INTAKE DANGER		9	INTOXICATION	
0	FUEL EXHAUSTION		0	SEARCH - RESCUE	
1	FUEL INADEQUATE		1	SUICIDE	
3	DUMPED FUEL		3	GLASSY WATER	
5	FUEL NOT DUMPED		5	WHITE OUT	
7	CARBURETTOR ICE		7		
9	JETTISON CARGO		9		

0	UNWANTED PROP REV.	
1	UNWANTED PROP. FEATHER	
3	OVERSPEED	
5	UNABLE TO FEATHER	
7	UNABLE TO CONTROL PROP.	
9	EVASIVE ACTION	

Document disclosed under the *Access to Information Act*
Document divulgué en vertu de la *Loi sur l'accès à l'information*

APPENDIX 2

VILOATIONS, DEFICIENCIES, IRREGULARITIES

None

Document disclosed under the *Access to Information Act*
Document divulgué en vertu de la *Loi sur l'accès à l'information*

APPENDIX 3

INVESTIGATION COST AND TIME DETAILS

1. DATE AND TIME OF ARRIVAL OF INVESTIGATORS AT THE ACCIDENT SCENE.

March 14, 1968 - 14:30 hours.

2. METHOD OF TRANSPORTATION.

D.O.T. Vehicle #52-8021

D.O.T. Aircraft CF-DTI

3. TOTAL CAR MILES D.O.T. CAR.

685 miles

4. D.O.T. AIRCRAFT TYPE AND TOTAL HOURS.

DeHavilland DHC2 - 6 hours

5. TOTAL MAN-HOURS.

210 hours

6. TOTAL EXPENDITURE.

$164.00

Document disclosed under the *Access to Information Act*
Document divulgué en vertu de la *Loi sur l'accès à l'information*

APPENDIX 6 (B)

s.19(1)

STATEMENT of [redacted]

On the 14th March 1968 at approximately 11:50 AM I was just going into the house for lunch when I heard what sounded like a helicopter approaching so I turned to look for it and as soon as it came out from behind a large tree I was in good view of it. It was heading in a southeasterly direction as though it was coming from Vancouver. It was level above the trees, above the bluff. Where I was situated the wind was fairly gusty and the engine noises faded in and out. As I was watching I saw something fly away from the top of the helicopter, this was fairly long and it flashed as though it was a piece of aluminum. Whatever this was it continued to fly in the air. The helicopter then came straight down, nose first, into the trees and it appeared to be in one piece as it entered the top of the trees. I then heard the thump as it crashed and saw a cloud of smoke come up.

The weather at the time was cloudy, there was no rain at that moment and the visibility was good. I could see that the color of the helicopter was sort of orange.

Before the piece flew off I would say I had the helicopter in site for only a second or two after it came out from behind this large tree in my yard.

I saw nothing else in the air at the time, in the form of other aircraft or birds.

[redacted]

Document disclosed under the *Access to Information Act*
Document divulgué en vertu de la *Loi sur l'accès à l'information*

APPENDIX 6 (C)

s.19(1)

STATEMENT of [redacted] 856-8566

On March 14, 1968 at about 11:45 PST I was outside in front of my house when I heard a helicopter and saw it opposite to my place on top of Jackman hill just north of Dorflinger's house. The helicopter seemed to be going west towards Vancouver at about 75 feet above the tree tops.

The helicopter was making a loud humming noise which they always seem to make as they go into a turn. The helicopter was flying straight and level. There was a loud sharp crack and some long object flew off the top of the helicopter. Then the helicopter made a sharp right turn toward the north tilted over on its side and headed down, nose first, at about an 80° angle. The tail assembly was still on as far as I could see. When the tail disappeared behind the trees there was a loud thump. I did not see any smoke rising from the area as it was hidden by the trees.

When the piece flew off of the helicopter I did not see any smoke nor did I see any other pieces fall from the helicopter and I did not hear any other noise except the humming noise described above.

The weather at the time was cloudy, overcast, and a steady light wind blowing toward the west where I was located. I do not think it was raining at the time.

I did not see anything else in the air close to the helicopter at the time.

[redacted]

Document disclosed under the *Access to Information Act*
Document divulgué en vertu de la *Loi sur l'accès à l'information*

APPENDIX 6 (D)

s.19(1)

STATEMENT of [redacted]

At around noon on the 14th March 1968 I was situated in my barn with my tractor running when I heard a loud noise outside and I went out and looked up the hill toward the southwest in time to see the helicopter heading down into the trees at the top of the hill. It appeared falling toward the east at a very sharp angle. There were a number of light objects still in the air and appeared to be drifting in a northerly direction as they were falling. I heard a loud thud and an explosion as the aircraft hit the ground and then there was a large puff of smoke.

The weather at the time was cloudy and if it was raining it was not very hard. The wind was not very strong where I was situated.

I saw no other objects in the form of bird or aircraft in the air at the time.

When I first saw the helicopter I would estimate he was possibly about 100 ft above the top of the trees at the top of the bluff.

[redacted]

Document disclosed under the *Access to Information Act*
Document divulgué en vertu de la *Loi sur l'accès à l'information*

APPENDIX 6 (E)

s.19(1)

STATEMENT of [redacted]

On March 14, 1968 at a little before 12:00 I was with another fellow, [redacted] sitting on the dike of the drainage ditch below the bluff and about 1/4 mile north of the accident area.

I heard a helicopter flying and the noise was a normal chopping sound that I have heard before. I was aware of this sound for maybe 30 seconds but I had not looked at the helicopter. I then heard a sputtering noise as if the motor was not right, this sound was louder than the chopping sound and I could not hear the chopping sound any longer. The spluttering lasted for only a moment and then it stopped also. I looked up and saw a helicopter above the trees on the bluff and to the south of me. The helicopter was horizontal when I first saw it and it immediately tilted front end down. At the same time as I first saw the helicopter tilt there was a lot of small pieces of debris floating or flying around the helicopter. I did not see any large objects falling but there were very small pieces in front of the helicopter and slightly larger objects around the rear both above and below it.

The nose of the helicopter tilted down and the helicopter fell in a very steep nose down angle to the ground. The helicopter went out of sight in the trees and I heard a thud immediately followed by another noise like lighting gas fumes. I did not see any smoke when the helicopter tilted, during the fall or when it disappeared.

The weather at the time was cloudy, no rain and no wind where I was located. There appeared to be a wind blowing up where the debris was as it was fluttering and drifting toward the northwest.

[redacted]

Document disclosed under the *Access to Information Act*
Document divulgué en vertu de la *Loi sur l'accès à l'information*

s.19(1)

APPENDIX 6 (F)

STATEMENT of [redacted]

On the 14th March 1968 shortly before noon I was sitting with my friend [redacted] on the south side of the drainage ditch approximately 1/4 mile north of the bluff where the accident occurred. While we were eating lunch I suddenly heard a helicopter in our general area making an unusual sound like a rolling hammering noise. I've heard this before when helicopters fly near and make a turn. Immediately after this sound I heard a sharp metalic crack. I looked around and saw a number of light objects floating around and then I noticed the helicopter angling in toward the tree tops in a west to east direction, there was no sounds of engines or anything at this time as it was falling. The next thing I heard was a helluva bang as it hit the ground. Approximately 2 seconds later there was an explosion and I saw a cloud of smoke rise up from the trees.

I did not see any other flying objects such as birds or other aircraft around the area at the time.

The weather where we were situated was cloudy with no rain or wind.

[redacted]

Document disclosed under the *Access to Information Act*
Document divulgué en vertu de la *Loi sur l'accès à l'information*

APPENDIX 6 (G)

s.19(1)

STATEMENT of [redacted]

I am employed by [redacted] as a flying instructor.

On the 14th March 1968 information was received that an aircraft accident had occurred near the Jackman hill and as I was already planning to proceed to Abbotsford I was requested to go to that area and investigate.

I left Langley in a PA-28 aircraft about noon with three other people on board and proceeded to the area. A wide circle was made of the area and a column of smoke was noticed in a bush area. Closer investigation showed that an aircraft was burning and there were people on the scene.

Weather conditions at take-off, the wind at Langley was SSE at approximately 15 + 25 and I would expect the wind at the scene to be at least that. Turbulence in the area was moderate to occasionally heavy with a broken cloud base 1500 to 2000 ft above ground. Some shower activity in evidence but none at the scene when I arrived.

I informed Abbotsford towerof the accident by radio and then proceeded to Abbotsford airport and landed.

Approximate flying time from take-off to sighting the wreckage would be ten or fifteen minutes.

[redacted]

Document disclosed under the *Access to Information Act*
Document divulgué en vertu de la *Loi sur l'accès à l'information*

APPENDIX 6 (H)

s.19(1)

STATEMENT of [redacted]

At approximately 12:15 on the 14th March 1968 I took-off from Langley Airport in Cherokee aircraft CF- (?) . I was situated in the rear seat as a passenger. The purpose of the flight was to fly to Abbotsford airport, however, prior to take-off the pilot received a request to fly over the accident area for confirmation purposes.

At take-off the ceiling was approximately 12 to 15 hundred feet and the wind was in the area of 20 to 25 MPH from the southeast and it was quite gusty. The flight over to the area was moderately turbulent with the occasional severe gust which would lift us out of our seats. Over the area we were getting the same conditions. The wreckage was still aflame and smoking on our arrival over the area and it would appear that the ambulance had already arrived, the attendants were standing beside the wreckage with the stretcher.

[redacted]

Document disclosed under the Access to Information Act
Document divulgué en vertu de la Loi sur l'accès à l'information

s.19(1)

APPENDIX 6 (I)

STATEMENT of [redacted]

I am employed by [redacted] in the position of Flying Instructor at [redacted] On March 14th, 1968 the writer was informed of a helicopter crash in the Fort Langley area at approximately 11:15 AM. Prior to receiving this call all float flying had been cancelled at 10:00 AM due to increasing turbulence. A turbulence check had been carried out by the writer and I would say the turbulence to range from moderate to extreme.

Looking to the east from the floatplane base I could see heavy rain over Ruskin Lake, which is opposite the crash area, which decreased to light shower activity on the south side of the river. It was also noted that the winds which I would judge to be blowing from a south, south-westerly direction, with an approximate wind speed of 15 to 25 MPH, which caused smoke from a small sawmill to be flat on the river.

The ceiling at that time would be 1500 - 2000'. This particular area, where the crash occurred, can be depended upon to produce turbulence at anytime of the daylight hours, which is capitalized on by glider or sailplane pilots during the soaring season. The writer uses the area over the river as a demonstration to all float pilots during their training to be aware of possible turbulence when flying to Harrison Lake.

Flying commenced again at the floatplane base at 1600 hrs and light to moderate turbulence was encountered in the circuit area.

[redacted]

Document disclosed under the *Access to Information*
Document divulgué en vertu de la *Loi sur l'accès à l'information*

s.19(1)

APPENDIX 6 (J)

STATEMENT of [redacted]

At approximately 11:15 AM March 14, 1968 I heard an approaching helicopter. I stepped outside to see who it was and noted it was an FH1100 on a west to east course. The aircraft's track was between our house and 64th avenue (Bose Rd), and paralleling Bose Road at an approximate altitude of 500 feet.

The FH1100 was red and white in Okanagan Helicopter's paint scheme.

There was some turbulence apparently, as the blades would occasionally make slapping sounds.

The helicopter was moving at a fairly fast cruising speed as compared to the taylorcraft and Fleet Canucks seen doing training work in our area.

I fly the FH1100 and my speed observations are usually made from the aircraft, thus I would not attempt to estimate his speed as a ground observer. I did admire how quick it was moving particularly in view of an apparent 10 - 20 MPH southeast wind somewhat against his line of flight.

I walked back into the house and observed the FH1100 from our kitchen window until it was out of sight several miles to the east. There was no apparent deviation in its path during the time I watched it.

[redacted]

Document disclosed under the *Access to Information Act*
Document divulgué en vertu de la *Loi sur l'accès à l'information*

A P P E N D I X 7

CREW LIST

PILOT

NAME: Par Frederick Raymond Fletcher,

ADDRESS: C/O Okanagan Helicopters Ltd.,
Vancouver International Airport, B.C.

INJURIES: Pathological Report - Appendix 15.

CORONER'S REPORT: Appendix 16.

Document disclosed under the *Access to Information A*
Document divulgué en vertu de la *Loi sur l'accès à l'informatio*

APPENDIX 9.

Document disclosed under the Access to Information Act
Document divulgué en vertu de la Loi sur l'accès à l'information

MEMORANDUM

CLASSIFICATION

TO
A R.D.A.S., Vancouver
Attention: Accident Investigation

YOUR FILE No.
Votre dossier

OUR FILE No. 5002-1 (MEV)
Notre dossier

AIR SERVICES REGISTRY
VANCOUVER
MAR 21 1968
File 5002-713

FROM
De O.I.C., Weather Office, Vancouver

DATE March 21, 1968.

FOLD

SUBJECT
Sujet Accident -CF-WMO-March 14, 1968.

1. Attached are copies of the forecast, actual weather and an aftercast of weather conditions about the time of the accident to CF-W.M.O.

02911

2. Pireps from aircraft in the vicinity at the time did not reveal anything since the aircraft were flying above the cloud tops at about 13000 feet.

D. Starkes
for Officer-in-Charge,
Weather Office, Vancouver.

Encls.

CGSB—AGP22a PP&S Cat. No. 2591

Document disclosed under the *Access to Information Act*
Document divulgué en vertu de la *Loi sur l'accès à l'information*

MEMORANDUM

CLASSIFICATION

TO
A

R.D.A.S., Vancouver
Attention: Accident Investigation,
Mr. Young

YOUR FILE No.
Votre dossier

AIR SERVICES REGISTRY
VANCOUVER
JUL 1 5 1968
File 5002-715

OUR FILE No.
Notre dossier 5002-1 (MEV)

FROM
De

O.I.C., Weather Office, Vancouver

DATE

July 12,1968.

FOLD

SUBJECT
Sujet

Aircraft Accident - CF-WMO.

33228

1. Enclosed as requested by phone are four copies of the surface chart for March 14th 1800Z and March 15th 0000Z, together with one copy of the 500mb chart for March 14th 1200Z and March 15th 0000Z.

D. Straker.
Officer-in-Charge,
for Weather Office, Vancouver.

Attachs.

Document disclosed under the *Access to Information Act*
Document divulgué en vertu de la *Loi sur l'accès à l'information*

AFTERCAST

There were no fronts in the area, but a deep low pressure area, centred about 300 miles west of Vancouver Island, had produced a fairly brisk southwesterly flow of moist unstable air over southwestern B.C. This airstream given additional orographic lift over the coast mountains produced extensive cumulus and heavy cumulus with tops 12 to 14 thousand and occasional showers. With the freezing level near 3500 feet MSL snow would be likely down to 2000-2500 feet. There were no reports of turbulence or icing but there was to be at least moderate turbulence and icing in the heavier convective cloud.

Document disclosed under the *Access to Information Act*
Document divulgué en vertu de la *Loi sur l'accès à l'information*

141900Z
VR 20ØM26Ø40Ø90Ø20 082/47/42/1414/976/CF2SC5SC1AC2
XX S E20Ø40Ø20RW-- 088/47/39/1714/978/CU+8SC1 QAGOM RNWY 06
TIL 2000Z

142000Z
VR 17ØM21Ø30Ø90Ø20 089/46/40/ 1613/978/ CF1SC2SC1AC1
XX 15ØE20Ø40Ø15RW-- 095/46/37/1918/980/CF2CU+5SC3 40Ø OCNLY
Ø HI CLD ABV LW SF E QAGOM RNWY 06 TIL 2100Z

VR S 142040Z 17Ø20ØM26Ø70Ø12RW- 1608 CF1CU4SC4AS1

XX S142040Z 15ØE20Ø40Ø10RW- 1825 CF4CU+4SC2

142100Z
VR 16Ø26ØM35Ø70Ø10RW- 096/46/41/1613/980/ CF1SC3SC5AS1 120
XX 15ØE20Ø40Ø10RW- 102/45/40/1823/982/ CF3CU+4SC3 222

FA VR1 141730Z
18-06Z
HTS ASL UNLESS NOTED
PROG
DFUS ARCTIC FNT QSTNRY S CALGARY-NR KAMLOOPS-W SMITHERS AT 1800Z.
LOW 175 MI W TOFINO AT 1800Z MVG NEWD TO JUST W SPRING ISLAND BY
0600Z AND FILG. AMS MOIST UNSTBL BCMG STBL N ARCTIC FNT

VR-1
S COAST RGN
CLDS AND WX. 10Ø20 20-30ØSCCU+60-120 90Ø120 OCNL 2-4RW-
WITH FEW CU+150 ALG CSTL MTNS. MTN PASSES FQTLY OBSCD 1/2-1SW-.
SFC WNDS 1325+ XPOSD AREAS

ICG. LGT RIME ICGIC XCP MDT CLR CU+. FRLVL 35

TURBC MDT NR CU+

FD VR1 141730Z
18-00Z

VR-1
S COAST RGN
6-1615/-5 10-1620/-12 14-1720/-21 18-1820/-31 22-1820/-41

FT2 VR1 141630Z
17-17Z

VR XX 20ØC40Ø90Ø CCNLY 15ØC30Ø RW- 0915. 0400Z C40Ø100Ø
END

Document disclosed under the *Access-to Information Act*
Document divulgué en vertu de la *Loi sur l'accès à l'information*

APPENDIX 12

FAIRCHILD HILLER
AIRCRAFT DIVISION

7 June 1968

Ref: SD-68-5635-JGB/mjb

AA

AIR SERVICE FACILITY
JUN 10 1968
File 5002-715

Mr. Tom Young
Department of Transport
Ministere Des Transports
739 West Hastings Street
Vancouver 1, B.C., Canada

Dear Tom:

Thanks for the print on the scatter pattern for the CF-WMO accident. Your letter 5002-715 requested information regarding the effects of rapid reduction of collective control near VNE and the effect of turbulence.

We are presently conducting a flight and analytical test program to determine if certain combinations of unusual flight conditions and turbulence could cause a safety of flight situation. We expect to have this testing completed the early part of June. At this time all operators will be advised of our recommendations. We will send you a copy of this report.

You also requested the force on the hydraulic power cylinder. The maximum feed-back force on the power cylinders are:

Longitudinal	-	912 pounds
Lateral	-	972 pounds
Collective	-	456 pounds

Also enclosed is a copy of the accident report you requested

Very truly yours,

FAIRCHILD HILLER CORPORATION
Aircraft Division

J. G. Baker
Supervisor, Service

Enclosure

HAGERSTOWN, MARYLAND 21740 TELEPHONE: AREA CODE 301, 733-3600

Document disclosed under the *Access to Information Act*
Document divulgué en vertu de la *Loi sur l'accès à l'information*

FAIRCHILD HILLER
AIRCRAFT DIVISION

INTER-OFFICE COMMUNICATION

Subject: Trip to Okanagan to Investigate Accident - FH-1100, S/N 96

To: Messrs. B. Davis, E. Morton

Date: 25 March 1968

In reply refer to: E-68PR1074

From: A. Bonnell, J. Baker

The subject aircraft was totally destroyed in an accident at 11:43 A.M. on Thursday March 14, 1968. The aircraft was being ferried from Vancouver Airport to a construction site near Hope, British Columbia to relieve a S-55 helicopter that had been damaged by rotor blade contact with a high-line tower. The Okanagan pilot, Par Fletcher, age 41, was fatally injured in the accident.

After a phone report from Okanagan, Glen Pearson, local area F-H service rep, was dispatched to Vancouver arriving at 6:00 P.M. March 14th. He immediately contacted Gordon Askin, Okanagan Maintenance Superintendent, and made arrangements to proceed to the scene with DOT and Okanagan representatives.

The writers, J. Baker, F-H Service and A. Bonnell, Engineering, along with L. Gaubis, Engineering were dispatched to Vancouver Friday morning March 15th, arriving at 5:00 P.M. Our mission was to render assistance in the accident investigation.

Upon arrival we met Glen Pearson who introduced us to T. Young, DOT representative in charge of the investigation. Mr. Young explained the accident area was under quarantine by DOT. We were welcomed to accompany the investigators the next morning. We were free to look and photograph but not to handle any of the wreckage until cataloguing by a survey team was completed. Any infractions of this rule could result in being barred from the area. (Mr. Young stated that Glen Pearson had assisted in the preliminary investigation on the previous day and had been very helpful).

Saturday, March 16th

Glen Pearson, L. Gaubis and the writers proceeded to the scene where we met DOT and Allison representatives. After touring the crash site, Mr. Young asked if we would assist in locating and marking pieces of wreckage, for cataloguing by the survey team.

Document disclosed under the *Access to Information Act*
Document divulgué en vertu de la *Loi sur l'accès à l'information*

The wreckage was scattered for over a quarter of a mile along a ridge covered with dense woods. The survey team was in the process of plotting a reference line with which to map the wreckage pattern. The balance of the day was spent locating and flagging pieces of wreckage. The scatter pattern determined is approximately as described on the map, Attachment 1. Because of the dense underbrush, distances are estimated.

Sunday, March 17th

Sunday we continued marking scatter pattern parts and moved the main wreckage out of the woods to a clear area. Sifted ashes for parts. Counted rod ends to establish completeness of control system. Started to gather parts from the scatter pattern that had been catalogued by the survey team.

Monday, March 18th

Finished gathering parts from the scatter pattern. Moved wreckage to DOT Building, Vancouver Airport. Interviewed witnesses.

Tuesday, March 19th

Layout of wreckage in DOT building. Layout of control system for check of hinge points. Upper controls were determined to be intact when rotor mast broke (See summary). Started reconstructing enclosure plexiglass to check for strike marks.

Wednesday, March 20th

Opened transmission. All parts appeared normal except for impact damage. Allison representatives completed engine disassembly. It was determined that the engine was running on impact. Completed assembly of glass enclosure for R.C.M.P. ballistics inspector on Friday. Matched strike marks in attempt to determine sequence of events.

Thursday, March 21th

Departed Vancouver.

SUMMARY

Weather conditions were as follows:

Overcast, approximately 3,000 feet
OAT 40° F
Wind from South/East at 15-20 mph
Moderate to severe turbulence in the area
No precipitation

Aircraft was flying on Southeasternly heading. After crossing Frazer River Valley it crossed a wooded ridge approximately 200 ft. elevation. Shortly after crossing this ridge line something caused the aircraft to go out of control.

Document disclosed under the Access to Information Act
Document divulgué en vertu de la Loi sur l'accès à l'information

After the main rotor assembly separated from the aircraft, the yellow-tipped blade penetrated the forward, right-hand section of the cockpit in the area of the battery and instrument console. The strike was trailing edge first. The tip section contacted the right-hand rudder pedal assembly.

The same blade also contacted the left-hand rear landing gear strut about 12" from the torque tube. The strut was broken by the impact and it along with the skid runner separated from the aircraft.

The tail rotor struck the pylon spar breaking both blades approximately 8" from the root. One blade tip, 1 1/2" long was broken off on contact with the spar. It has not been determined what caused the tail rotor to contact the pylon spar. There is no evidence of any foreign object striking the tail rotor.

The body section of the helicopter impacted in a nose down attitude, coming to rest in an inverted position. The aircraft body in the area of the fuel cell was destroyed in the resulting fire.

A. Bonnell
A. Bonnell

J. Baker
J. Baker

cc: J. Burke
J. Grabber (2)
H. Hockett (2)
R. Lessard
J. Lovell
D. Meadowcroft (2)
R. Peck (2)
W. Rosborough
J. Sweely
L. Gaubis

Document disclosed under the *Access to Information Act*
Document divulgué en vertu de la *Loi sur l'accès à l'information*

ATTACHMENT # 1

Form

SHEET #1

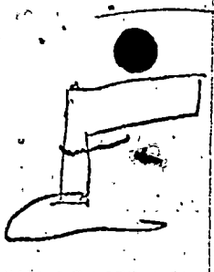

Typ Comm Equipt Ltd

CM Filter

Type 455-24-C

Mfg No 2780 T 6-67

Trees End

Radio ID Plate

100 yds

#1 #2 TR

#3 FR Control Overhead Panel

Window & Bubble

15" sect of Pylon TR drive cover out plates ripped out

25 yds

Jacket in trees

Flt Report Book on Ground

Window

5" sect AR Blade

Document disclosed under the Access to Information Act
Document divulgué en vertu de la Loi sur l'accès à l'information

ATTACHMENT # 1
SHEET

#2

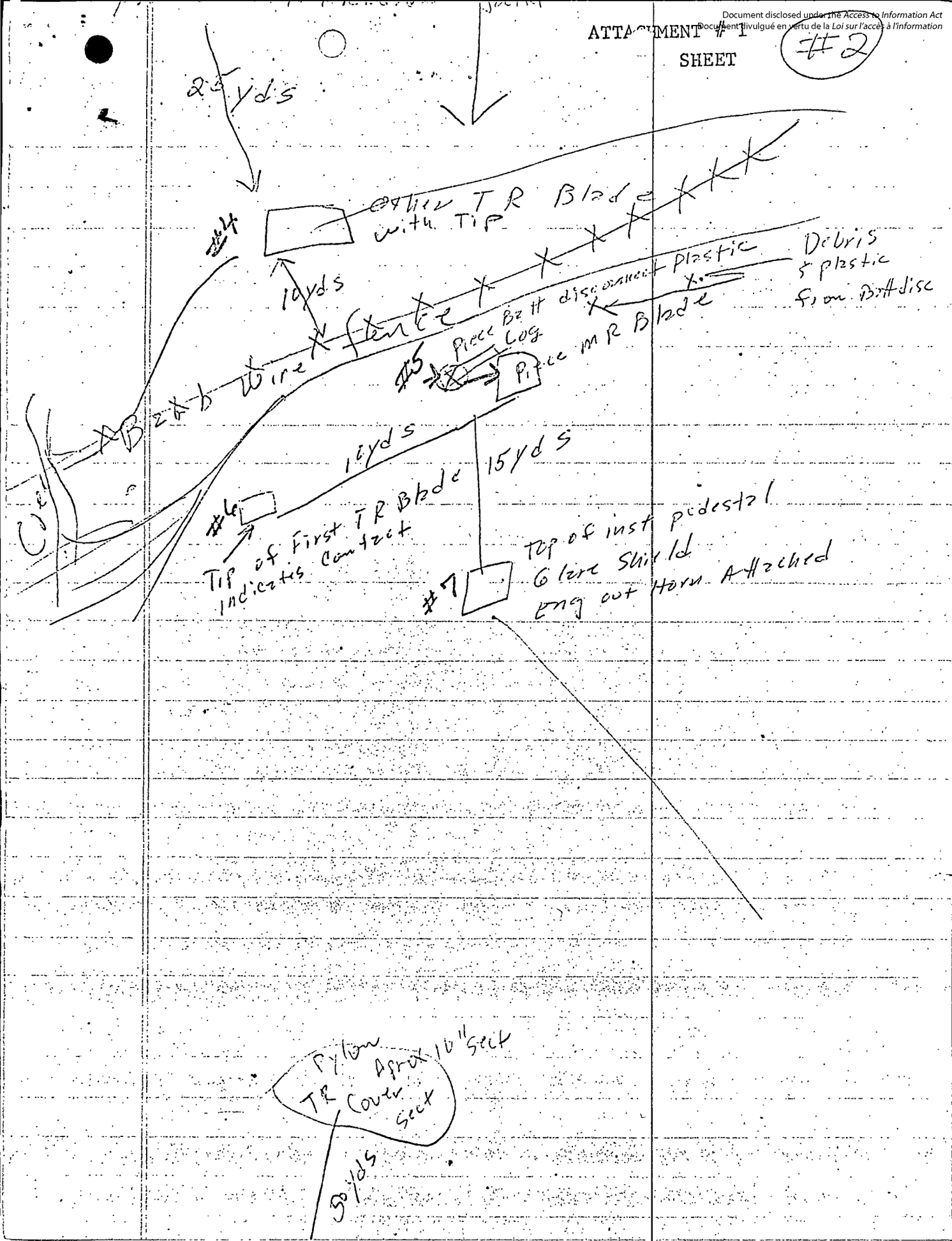

Document disclosed under the Access to Information Act
Document divulgué en vertu de la Loi sur l'accès à l'information

ATTACHMENT # 1
SHEET

#3

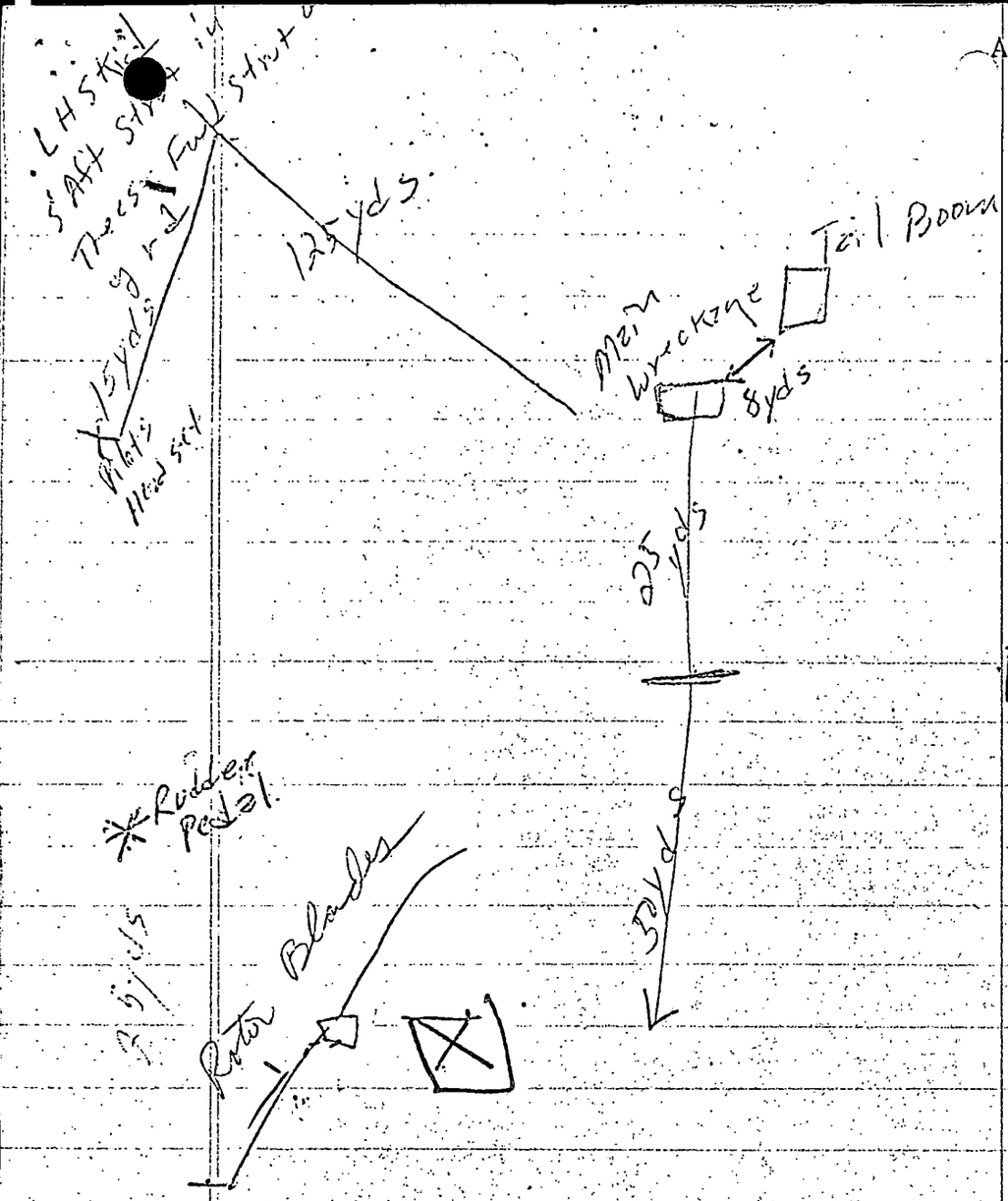

Document disclosed under the Access to Information Act
Document divulgué en vertu de la Loi sur l'accès à l'information

APPENDIX 13

MASTER INSTRUMENTS LTD.
VANCOUVER INTERNATIONAL AIRPORT
BRITISH COLUMBIA, CANADA

Telephone:
278-6131
AREA CODE 604
TELEX No. 04-50300

April 15, 1968

AIR SERVICES BRANCH
VANCOUVER
APR 16 1968
File 5062-715

Department of Transport Aviation Division
Accident Investigation Branch
739 West Hastings Street
Vancouver, B. C.

Attention: Mr. Tom Young

Dear Sir:

Functional tests were completed in our shop on April 10, 1968 on the following hydraulic units and observed by Mr. Tom Young

The tests were completed according to the Manufacturer's Specifications.

Power Cylinder, Part No. 9710, Serial No. S159:

Internal Leakage Test	Neutral	8 cc/min.
" " "	Extended	Negligible
" " "	Retracted	Negligible

Pilot valve force - normal.

Power Cylinder, Part No. 9720, Serial No. T525:

Internal Leakage Test	Neutral	20 cc/min.
" " "	Extended	10 cc/min.
" " "	Retracted	10 cc/min.

Pilot valve force - normal.

Power Cylinder, Part No. 9720, Serial No. T601:

Internal Leakage Test	Neutral	12 cc/min.
" " "	Extended	6 cc/min.
" " "	Retracted	3 cc/min.

Pilot valve force - normal.

General operation of the above cylinders was satisfactory.

continued.....

Document disclosed under the *Access to Information Act*
Document divulgué en vertu de la *Loi sur l'accès à l'information*

Lock and Load Limiter, Part No. 8810, Serial No. 511:

Cracking Pressure	11 p.s.i.
Reseat	11 p.s.i.

Lock and Load Limiter, Part No. 8810, Serial No. 242:

Cracking Pressure	9 p.s.i.
Reseat	9 p.s.i.

Relief Valve, Part No. 8720, Serial No. 427:

Cracking Pressure	24.5 p.s.i.
Reseat	24.5 p.s.i.

Relief Valve, Part No. 8720, Serial No. 501:

Cracking Pressure	22 p.s.i.
Reseat	22 p.s.i.

General operation of the four preceding units was normal.

Yours very truly,

MASTER INSTRUMENTS LIMITED

W. Madill

WM:dp

Document disclosed under the *Access to Information Act*
Document divulgué en vertu de la *Loi sur l'accès à l'information*

A P P E N D I X 14

I N D E X of main rotor (yellow) blade areas designated in RCMP chemical analysis report. All measurements taken from the blade root attachment bolt hole outwards toward blade tip.

Area "A"	89"	on blade leading edge
Area "B"	109"	on blade leading edge
Area "C"	147"	on blade leading edge and lower surface
Area "D"	60" to 70"	on blade leading edge and upper and lower surface
Area "E"	154"	on blade upper surface mid point between leading and trailing edges
Area "F"	158" to 162"	on blade leading edge upper surface

Document disclosed under the *Access to Information Act*
Document divulgué en vertu de la *Loi sur l'accès à l'information*

C-430*
REV. 1-4-66

ROYAL CANADIAN MOUNTED POLICE — GENDARMERIE ROYALE DU CANADA

CRIME DETECTION LABORATORY REPORT – RAPPORT DES LABORATOIRES JUDICIAIRES

THIS REPORT OR ANY RELATED PHOTOGRAPHIC OR OTHER MATERIAL MAY NOT BE PUBLISHED, IN WHOLE OR IN PART, WITHOUT THE WRITTEN CONSENT OF THE COMMISSIONER OF THE ROYAL CANADIAN MOUNTED POLICE.

IL EST INTERDIT DE PUBLIER EN TOUT OU EN PARTIE CE RAPPORT OU TOUTE DOCUMENTATION PHOTOGRAPHIQUE OU AUTRE S'Y RAPPORTANT SANS LE CONSENTEMENT PAR ÉCRIT DU COMMISSAIRE DE LA GENDARMERIE ROYALE DU CANADA.

"HQ" FILE NO. – DOSSIER "QG" NO	LAB. FILE NO. – DOSSIER DU LAB. NO	DATE
	392-968	10 April 1968

YOUR REF. NO. – VÓTRE RÉF. NO	ENCLOSURES – PIÈCES JOINTES	PLACE – LIEU
		Vancouver, B.C.
	LABORATORY REPORT NO. / RAPPORT DU LABORATOIRE NO: 1	

SECTION	CLASSIFICATION
CHEMISTRY	C.N. 51 & 81

FOR – DESTINATAIRE

Regional Director Air Services, Department of Transport, 739 W. Hastings St., Vancouver, B.C. (Att: Mr. T. Young)

REFERENCE – RÉFÉRENCE

Crash of Hiller FH 1100 Helicopter CF-WMO - Nr. Langley, B.C.

COPIES TO – COPIES À

Officer i/c Scientific Services, Crime Detection Laboratories, RCMP, Ottawa, Ont.

1. GENERAL: The following exhibits were received personally from Mr. T. Young, Dept. of Transport at Vancouver International Airport on March 21, 1968:

Exhibit 14 - Battery

" 56 - Bent metal tube

" 64 - Battery connector, green plastic

" 96 - Piece of perspex with adherant black substance

" 88 - Metal grid from radio

" 98 - Broken section of rotor blade

" 158 - Perspex section, with apparent blood stain

" 193 - Perspex section, with adherant black substance

The following exhibits were received personally at the Crime Detection Laboratory Vancouver on March 22, 1968:

Exhibit 25 - Left u/c skid, aft section

" 26 - Left u/c skid, forward section

" LA - Battery cable

" LB - Left u/c strut, aft

" LC - One rotor blade

Document disclosed under the *Access to Information Act*
Document divulgué en vertu de la *Loi sur l'accès à l'information*

Re: Crash of Hiller FH 1100 Helicopter CF/WMO - Nr. Langley, B.C.

1. GENERAL: (Cont'd.)

The following exhibit was received personally at the Crime Detection Laboratory Vancouver on March 29, 1968:

Exhibit LD - Polythene bag containing four paint sections (labelled LD1, LD2, LD3 and LD4) with orange/white and in some cases other layers.

2. PURPOSE: To compare foreign material (eg paint) on exhibit LC et al with native material on other exhibits.

3. DATA: All exhibits were examined microscopically. Where apparent foreign material was observed, samples were taken.

Exhibit LC was marked into areas A, B, C, D and E and samples were taken, labelled and examined microscopically.

From exhibit LC, area A(leading edge of rotor):

LC1 - trace of thin plastic material with adhering black paint.

LC2 - thin plastic material with embedded trace of bright green substance.

From exhibit LC, area B(underside of rotor):

LC3 - paint chip, 2 layer orange/white with trace of black material on white layer; paint chip, 2 layer, silvery-grey/black; traces of colourless material resembling perspex.

LC4 - native black paint scrapings; traces of turquoise-green plastic material containing colourless fibres.

From exhibit LC, area C

LC5 - (from leading edge of rotor) thin plastic strip. Trace contamination with yellow paint.

LC6 - (from underside of rotor) - Native black paint scrapings.

LC7 - (from upper side of rotor) - Native grey paint, top layer. (upper side of rotor has a 2 layer paint, grey(top)/yellow.)

LC8 - (from underside of rotor) - Native black paint, top layer. (Underside of rotor has a 2 layer paint, black(top)/yellow)

LC9 - (from upper side of rotor) - Native grey paint scrapings.

.....3

Document disclosed under the *Access to Information Act*
Document divulgué en vertu de la *Loi sur l'accès à l'information*

Re: Crash of Hiller FH 1100 Helicopter CF-WMO - Nr. Langley, B.C.

3. DATA:(Cont'd.)

On exhibit LC, area D:

Striations on edge and surface of rotor. Insufficient foreign material for examination.

From exhibit LC, area E:

LC10 - (from upper side of rotor). Foreign black paint scrapings.

LC11 - (from underside of rotor, within cut). Paint chip, 3 layer, thick clear plastic(top)/orange/ traces of material including very pale yellowish and black substances.

Exhibit 14 was marked into areas B1, B2 and B3: samples were taken, labelled and examined microscopically.

From exhibit 14, broken plastic connector.

Exhibit 14(1): turquoise-green plastic with colourless fibres throughout.

From exhibit 14, area B1, foreign material.

Exhibit 14(B1): Thin colourless plastic strip with embedded turquoise-green plastic with colourless fibres. Thin colourless plastic strip streaked with black paint with traces of embedded turquoise-green plastic with colourless fibres.

From exhibit 14, area B2, foreign material.

Exhibit 14(B2): Traces of grey paint scrapings; yellow paint scrapings; 2-3 minute chips of a 2-layer grey/yellow paint; turquoise-green plastic with colourless fibres; traces of thin plastic.

From exhibit 14, area B3, foreign material.

Exhibit 14(B3): Black paint scrapings.

Exhibit 88 was examined and apparent foreign samples removed from same were examined microscopically.

Exhibit 88(a): Pieces of clear plastic.

.....4

Document disclosed under the *Access to Information Act*
Document divulgué en vertu de la *Loi sur l'accès à l'information*

3. DATA:(Cont'd.)

Exhibit 88(b): Metal filing; metal filing with adherant pale blue crystalline or plastic material; loose pale blue crystalline or plastic material; chip of black paint; chip of grey/yellow paint; white fibrous material with embedded traces of colourless plastic and metal.

Exhibit 88(c): 2 layer paint, grey/yellow

Exhibit 88(d): Native black paint

From exhibits LB, 25, 56, 96 and 193 samples were removed, labelled and examined microscopically.

Exhibit LB(a): Native paint, 2 layer orange(top)/yellow.

" LB(b): Foreign black paint near fractured end.

" 25(a): Black paint from broken section.

" 56(a): Grey paint scrapings; 2 layer black/grey paint chip.

" 96(a): Foreign black paint-like material from surfaces of perspex.

" 193(a): Foreign black paint-like material from surface of perspex; soil-like material.

" 193(b): Native sample of clear perspex for comparison purposes.

The very small quantities of most samples of foreign material precluded spectrographic examination. Significant components of the following samples were analysed by pyrolysis gas chromatography: LC1, LC2, LC3, LC5, LC6, LC7, LC8, LC9, LC10, LC11; 14(B1), 14(B3); 88(a), 88(c), 88(d); LB(b); 25(a), 56(a), 96(a); 193(a), 193(b).

4. CONCLUSIONS: The term "chemical composition" as used below refers to the chromatograms obtained by pyrolysis gas chromatography. This technique gives an indirect determination of the organic constitution of the samples and is used comparatively.

(1) The chemical composition of plastic samples from the rotor edge (exhibits LC1, LC2 and LC5) is the same, indicating a common origin.

.....5

Document disclosed under the *Access to Information Act*
Document divulgué en vertu de la *Loi sur l'accès à l'information*

Re: Crash of Hiller FH 1100 Helicopter CF-WMO - Nr. Langley, B.C.

4. CONCLUSIONS:(Cont'd.)

(2) The chemical composition of the plastic on the battery in area B1, (Exhibit 14B1) is the same, indicating a common origin.

(3) The chemical composition of the plastic in exhibits LC1, LC2 and LC5 differs from that in exhibit 14 B1, indicating a different origin.

(4) No sample of plastic was received with a composition comparable to that in exhibit 14 B1.

(5) The turquoise-green plastic with the colourless fibres embedded in the plastic in exhibit 14 B1 originated from exhibit 14(1) or exhibit 64.

(6) From conclusion (5) and striations on the battery (exhibit 14) it appears that exhibit 14(1) and/or exhibit 64 were struck from above.

(7) The 2 layer grey/yellow paint in area B2 of exhibit 14(exhibit 14 B2) originated on the upper side of the rotor.

(8) The black paint in area B3 of exhibit 14 (exhibit 14 B3) has a chemical composition similar to the black paint in the underside of the rotor (exhibit LC8), and different from that on the radio grill (exhibit 88(d).

(9) The turquoise-green plastic with the colourless fibres in exhibit LC4 originated from exhibit 14(1) and/or exhibit 64 implying that the battery connector was in contact with the underside of the rotor in area B.

(10) The 2 layer orange/white paint chip (exhibit LC3) removed from area B of the rotor has an identical composition to a 2-layer orange/white paint chip cut from exhibit LD3 indicating a common origin.

(11) The radio grill (exhibit 88) was struck by area D of the rotor from comparison of striations in the rotor with the metal lattice of the grill.

(12) The 2-layer grey/yellow paint (exhibit 88(c)) recovered from exhibit 88 originated on the upper side of the rotor.

(13) The clear plastic material (exhibit 88(a)) recovered from exhibit 88 has a different chemical composition from the perspex of the cabin "bubble" and from other plastic exhibits examined.

Document disclosed under the *Access to Information Act*
Document divulgué en vertu de la *Loi sur l'accès à l'information*

Re: Crash of Hiller FH 1100 Helicopter CF-WMO - Nr. Langley, B.C.

4. CONCLUSIONS:(Cont'd.)

(14) The foreign black paint on the rotor upper side in area E (exhibit LC10) had a different composition from the black paints on exhibits 25 (a), 88(d) or LC8.

(15) The bright green substance in exhibit LC2 did not originate from exhibit 14(B1) or exhibit 64.

(16) The physical nature and chemical composition of exhibit LC11 do not correspond to those of any other exhibit examined.

(17) The foreign black paint on the left u/c strut aft (exhibit LB(b)) has a chemical composition similar to that of the rotor underside (exhibit LC8).

(18) Insufficient grey paint was recovered from exhibit 56 for analysis.

(19) The foreign black paint on exhibit 96(a) has a chemical composition similar to that on the underside of the rotor (exhibit LC8).

(20) The foreign black paint on exhibit 193(b) has a composition similar to that on the underside of the rotor (exhibit LC8). However, the nature of the pattern indicates that this paint was probably accidentally sprayed onto this surface, as opposed to deposited by collision. A nitrate test was negative.

5. REMARKS: Exhibit 158 was turned over personally to C/M F.M. Ferris of the Serology Section on March 22, 1968 and received back personally from C/M F.M. Ferris on March 29, 1968.

Exhibits LB, LC, 25 and 26 were returned personally to Mr. Chandler, Dept. of Transport at the Crime Detection Laboratory on March 26, 1968.

The remaining exhibits were returned personally to Mr. Young, Dept. of Transport on April 10, 1968 at the Crime Detection Laboratory.

Submitted by:

A.D. Beveridge,B.Sc., Ph.D., A.R.I.C.
Chemistry Section.

Approved by:

D.M.Duke,B.A.,S/Insp.,
Officer i/c Vancouver Laboratory.

Document disclosed under the *Access to Information Act*
Document divulgué en vertu de la *Loi sur l'accès à l'information*

C-430*
REV. 1-4-66

ROYAL CANADIAN MOUNTED POLICE — GENDARMERIE ROYALE DU CANADA
CRIME DETECTION LABORATORY REPORT – RAPPORT DES LABORATOIRES JUDICIAIRES

THIS REPORT OR ANY RELATED PHOTOGRAPHIC OR OTHER MATERIAL MAY NOT BE PUBLISHED, IN WHOLE OR IN PART, WITHOUT THE WRITTEN CONSENT OF THE COMMISSIONER OF THE ROYAL CANADIAN MOUNTED POLICE.

IL EST INTERDIT DE PUBLIER EN TOUT OU EN PARTIE CE RAPPORT OU TOUTE DOCUMENTATION PHOTOGRAPHIQUE OU AUTRE S'Y RAPPORTANT SANS LE CONSENTEMENT PAR ÉCRIT DU COMMISSAIRE DE LA GENDARMERIE ROYALE DU CANADA.

AIR TRANSPORT BRANCH
VANCOUVER
APR 8 - 1968
File 5002-75

"HQ" FILE NO. – DOSSIER "QG" NO	LAB. FILE NO. – DOSSIER DU LAB. NO	DATE
	392-968	1 April 1968
YOUR REF. NO. – VOTRE RÉF. NO	ENCLOSURES – PIÈCES JOINTES	PLACE – LIEU
	-	Vancouver, B.C.
	LABORATORY REPORT NO. / RAPPORT DU LABORATOIRE NO	1
SECTION	CLASSIFICATION	
SEROLOGY	C.N. 27	

FOR – DESTINATAIRE

Regional Director Air Services, Department of Transport Att: Mr. Young
739 W Hastings Street, Vancouver, B.C.

REFERENCE – RÉFÉRENCE

Crash of Hiller FH 1100 Helicopter
CF - WMO - Nr. Langley, B.C.

COPIES TO – COPIES À

Officer i/c Scientific Services, C.I.D. Labs., R.C.M.P., Ottawa, Ont.

1. GENERAL: The following exhibit was received personally from Dr. A.D. Beveridge of the Crime Detection Laboratory Chemistry Section on March 22, 1968:

Exhibit #158 - One piece of transparent material said to be from helicopter.

2. PURPOSE: To conduct a serological examination on exhibit #158.

3. DATA: Exhibit #158 was examined (1) for the presence of blood and (2) to determine the species origin of any blood present.

4. CONCLUSION: Human blood of Group O was found to be present on exhibit #158 - one piece of transparent material, said to be from helicopter.

5. REMARKS: Exhibit #158 was returned to Dr. A.D. Beveridge of the Laboratory Chemistry Section on March 29, 1968.

Submitted by:
F.M. Ferris
(Mrs.) F.M. Ferris, B.A., R.T.,
Serology Section

Approved by:
D.M. Duke
D.M. Duke, B.A., S/Insp.
Officer i/c Vancouver Lab.

Document disclosed under the *Access to Information Act*
Document divulgué en vertu de la *Loi sur l'accès à l'information*

PA
14/3/68

Document disclosed under the *Access to Information Act*
Document divulgué en vertu de la *Loi sur l'accès à l'information*

APPENDIX 15

PATHOLOGICAL REPORT — ROYAL COLUMBIAN HOSPITAL
March 18/68 Tissue No. 68-NS-43

Patient FLETCHER, Frederick Raymond

Physician Coroner L. M. McDonald

REPORT OF FINDINGS

GROSS CIRCUMSTANCES OF DEATH:

The body of this middle-aged white male was found at the site of a helicopter crash in the municipality of Langley, B.C. on the 14th of March 1968.

Tentative identification was made as that of the pilot Mr. Frederick Raymond Fletcher.

The autopsy was performed at 10:30 AM at the Columbia Funeral Home in the city of Langley on the 15th of March 1968.

The body was identified by Mr. A. Anderson as that found at the scene of the crash.

GROSS AUTOPSY FINDINGS:

The body was that of a middle-aged white male, which had received multiple injuries and which had been burnt extensively. The body was sufficiently burned that facial features could not be recognized. Most of the clothing had been burnt from the body.

There was a penetrating wound in the right temple measuring approximately 1.5 cm. in diameter. The margins of this would were scorched however the adjacent would was fragmented and irregular in shape indicating penetration by a blunt object. The brain adjacent to the wound was macerated.

The anterior of the chest wall was badly burned with very little remaining of the pectoral muscles. Portions of the sternum and rib cage had been completely burned away, more so on the right side of the chest leaving a gaping hole some 7 CM. in diameter. The anterior abdominal wall had been burnt away and portions of the small bowel badly burned. The left leg had a jagged compound fracture just above the knee extending to the femur and most of the surrounding soft tissue. In addition there was a compound fracture of the tibia and fibula just above the ankle. On the right leg the skin of the thigh had been burned away and portions of the muscles remained only. The right foot had been burned off and portions of the charred calcaneous was all that could be identified. The limbs were badly scorched.

INTERNAL EXAMINATION:

THORAX: The lungs were partially collapsed and surrounded by congealed and hemolyzed blood. The lung parenchyma was partially burned and grossly distorted by heat.

HEART: There were three lacerations extending into the heart, one in the anterior surface of the right ventricle measuring approx 1.5 cm. in length, one in the anterior surface of the left ventricle measuring approx. 1 cm. in length, and one in the posterior surface of the left ventricle measuring approx 2 cm. in length. Each of these lacerations extended through the full thickness of the myocardium. Associated with these lacerations were lacerations in the pericardium. There were two major lacerations in the aorta, one just above the aortic valve, there was almost a complete transection of the aorta at this point.

Document disclosed under the *Access to Information Act*
Document divulgué en vertu de la *Loi sur l'accès à l'information*

The second linear transection of the aorta curve in the arch extending a length of 4 cm. at the site of origin of the great vessels. No blood remained in the heart or the great vessels and repeated attempts of aspiration of all the major vessels in the body failed to produce sufficient blood for blood alcohol examination.

ABDOMEN: The abdomen was grossly distorted by the fire and all abdominal organs showed the effect of extreme heat with extreme edema and in some areas charring of tissues. Grossly the organs appeared unremarkable.

ANATOMICAL DIAGNOSIS:

1. SEVERE TRAUMA INCLUDING PENETRATING WOUND OF THE SKULL.
2. MULTIPLE FRACTURES TO LEGS.
3. MULTIPLE LACERATIONS OF HEART.
4. MULTIPLE LACERATIONS OF AORTA.
5. EXTENSIVE BURNS TO THE ENTIRE BODY.

CAUSE OF DEATH:

PENETRATING WOUND OF SKULL AND LACERATIONS TO HEART AND AORTA.

"A. E. GRANT"
A. E. Grant, M.D. - Pathologist

AEG:id

Document disclosed under the *Access to Information Act*
Document divulgué en vertu de la *Loi sur l'accès à l'information*

APPENDIX 16

"E" Division
C.I.B.

YOUR NO.
VOTRE N°

OUR No. 68E-500-453
NOTRE N°

Victoria, B. C.
29 May 1968

Regional Director,
Air Services,
Civil Aviation,
Department of Transport,
739 West Hastings Street,
Vancouver 1, B. C.

AIR SERVICES REGISTRY
VANCOUVER
MAY 30 1968
File 5002-715

Dear Sir:

Re: Par Frederick Raymond FLETCHER - Accidental Death (Aircraft Accident) - Nr. Aldergrove, B. C. - 14 March 1968

Further to my memorandum of 10 April 1968, attached please find a copy of Langley Municipal Detachment report dated 23 May 1968, covering the results of the Coroner's inquest.

Yours truly,

H. L. Jordan, Insp.,
Asst. C.I.B. Officer

Enc

Document disclosed under the Access to Information Act
Document divulgué en vertu de la Loi sur l'accès à l'information

ROYAL CANADIAN MOUNTED POLICE - GENDARMERIE ROYALE DU CANADA

6880

C 237
REV. 1-4-66

OTHER FILE REFERENCES: REF. AUTRES DOSSIERS:	DIVISION	DATE	RCMP FILE REFERENCES: REF. DOSSIERS GRC:
PCR 27 Mar 68	"E"	23 May 68	68-500-25
	SUB-DIVISION - SOUS-DIVISION: New Westminster		
	DETACHMENT - DÉTACHEMENT: Langley Municipal		

RE: OBJET: Par Frederick Raymond FLETCHER, - Accidental Death (Aircraft Accident) 14 Mar 68, near Aldergrove, B.C.. (Org.)

s.19(1)

PROPERTY OF R.C.M.P. — THIS POLICE RECORD IS SUPPLIED TO YOU BY THE R.C.M. POLICE FOR INFORMATION OF YOUR DEPARTMENT ONLY. IT IS NOT TO BE MADE KNOWN TO ANY OTHER AGENCY OR PERSON WITHOUT THE WRITTEN PERMISSION OF THE R.C.M.P.

1. On May 13th, 1968, at 7.30 P.M., the Inquest into the listed death was re-commenced at the Langley Mun. Det., court room and the following persons gave evidence as indicated;

(a) Dr. A.E. GRANT,(Pathologist) Sworn, gave evidence as indicated in pathological report referred to in para. #12 pcr dated 27 Mar 68.
(b) Cpl. W.J.STACEY, Sworn, entered photographs, and sketch, gave evidence as outlined in pcr dated 27 Mar 68.
(c) Mr. J.KEEFER,Mun. Soliciter, entered a Statement of Fact received from the D.O.T., via registered mail. The contents of said statement were read into the record of the proceedings and contained no information not already reported upon and contained in initial report listed above.
(d) Mr. [redacted] Sworn, gave evidence as contained in his statement.
(e) Mr [redacted], Sworn, gave evidence as contained in his statement.
(f) Mr. [redacted], Sworn, gave evidence as contained in his statement.
(g) Mr. [redacted] Sworn, gave evidence as contained in his statement. He was cross-examined with particular reference to the direction in which he first saw the helicopter flying by the Mun. Soliciter J.KEEFER, however, he did not vary from his original statement even though the weight of the evidence put to him clearly indicated that he was confused.
(h) Mr. [redacted], Sworn, gave evidence as contained in his statement.
(i) Mr. [redacted], Sworn, gave evidence as contained in his statement.
(j) Mr. James Edward MURPHY, Vancouver Manager for OK Helicopters Ltd., Vancouver, B.C., Sworn, gave evidence of being a qualified helicopter pilot, familiar with the type of machine involved in the accident. Testified that he knew FLETCHER (deceased) and on the day of the crash he had observed him prior to take-off and also at take-off at Vancouver, B.C.. MURPHY stated that FLETCHER appeared sober, normal and in good health, and that he (MURPHY) considered him to be a competent helicopter pilot. He also stated that he was very familiar with the type of aircraft involved, he considered the one that had crashed to have been in good shape and could offer no positive conclusions that would explain why the machine in question came down.

2. OK Helicpoters Ltd., Vancouver, B.C., were represented at the Inquest by Mr. David HUTTON, of the Law Firm of Campney, Owen & Murphy, Vancouver, BC..

3. Upon being instructed by the Coroner and after due deliberation the Jury returned the following Verdict; We the Jury find that Par Frederick FLETCHER died as a result of a helicopter accident on the Jackman Road hill, Langley Municipality, in the County of Westminster, in the Province of British Columbia between the hours of 11.30 A.M., and 12.00 Noon March 14th, 1968. The Deceased died as a result of a penetrating wound to the skull and lacerations to the heart and aorta. Cause of the accident was undetermined.

3. All Effects listed on form C246 have been returned to the next of Kin and the completed form properly signed and initialled is held on file at this point. No representative of the W.C.B., attended this Inquest. Concluded here.

(W.J.Stacey)Cpl..

(W.M.)Sgt.,
i/c Det..

Document disclosed under the *Access to Information Act*
Document divulgué en vertu de la *Loi sur l'accès à l'information*

"E" Division
C.I.B.

YOUR NO.
VOTRE N°

OUR NO. 68E-500-453
NOTRE N°

Victoria, B. C.
10 April 1968

Regional Director,
Air Services,
Civil Aviation,
Department of Transport,
739 West Hastings Street,
Vancouver 1, B. C.

AIR SERVICES REGISTRY
VANCOUVER
APR 11 1968
File 5002-2

Dear Sir:

Re: Par Frederick Raymond FLETCHER - Accidental Death (Aircraft Accident) - Near Aldergrove, B. C. - 14 March 1968

Attached for your information please find a copy of our Langley Municipal Detachment report dated 27 March 1968, statements obtained from eye witnesses to this crash and copies of photographs which were taken at the scene of the accident.

Our investigation thus far has failed to indicate any suggestion of foul play and it would appear that the accident was a result of a mechanical malfunction.

Copies of subsequent reports will be forwarded upon receipt.

Yours truly,

H. L. Jordan, Insp.,
Asst. C.I.B. Officer

Enc

Document disclosed under the Access to Information Act
Document divulgué en vertu de la Loi sur l'accès à l'information

ROYAL CANADIAN MOUNTED POLICE - GENDARMERIE ROYALE DU CANADA

CMP C 6880

C 237
REV. 1-4-66

OTHER FILE REFERENCES: REF. AUTRES DOSSIERS:	DIVISION "E"	DATE 27 Mar 68	RCMP FILE REFERENCES: REF. DOSSIERS GRC:
First here.	SUB-DIVISION - SOUS-DIVISION New Westminster		
	DETACHMENT - DÉTACHEMENT Langley Municipal		68-500-25

RE: OBJET: Par Frederick Raymond FLETCHER, - Accidental Death(Aircraft accident) 14 Mar 68, near Aldergrove, B.C.. (Org.)

PROPERTY OF R.C.M.P. — THIS POLICE RECORD IS SUPPLIED ON LOAN BY THE R.C.M. POLICE FOR INFORMATION OF [illegible] DEPARTMENT ONLY. IT IS NOT TO BE REPRODUCED OR LOANED TO ANY OTHER AGENCY OR PERSON WITHOUT THE WRITTEN PERMISSION OF THE R.C.M.P.

1. At 11:58 A.M., 14 MAR 68, Mr. Karl DORFLINGER, 7025 Jackman Road, Aldergrove, B.C. contacted this office to advise that a helicopter had just crashed and was burning on his property in bushland adjacent to his buildings in an area known locally as the Jackman Hill, and located roughly midway between the town site of Aldergrove, B.C. and the Fraser River.

2. The writer accompanied by Cst. O. Forsyth made an immediate patrol to the area, approaching from the north on Jackman Road, and Sgt. W. Maguire, alone in another transport approached the area from the south on Jackman Road. This approach was necessitated by prior knowledge of an extensive washout on the Jackman road on the hill in question where the road descends to the bottomlands adjacent to the Fraser River. D.O.T. and AIR SEA RESCUE were on stand-by, awaiting confirmation of the accident from this office. The Jackman Hill at the crash area is 263' above sea level, according to local records, and is actually part of a ridge that parallels the Fraser River for some miles in either direction.

3. Upon arrival on foot at the top of the hill on the DORFLINGER property, Cst. Forsyth and myself were directed to the bushland area of his farm, which is north of his buildings (see Appendix "G"), and upon entering the bush came almost at once upon the main rotor of the helicopter. Proceeding farther into the bush which thickened to heavy bush we came upon the main wreckage of the helicopter which was burning, and contained, also, the burning remains of what was obviously one human body. (See photo #3). It was apparent that the body in the wreckage was beyond medical aid, and considering the existing conditions, burning aviation fuel and molten metal, it was decided that any attempt to remove the body at this time would be a futile and pointless endeavour and presented unwarranted danger to those present. It had commenced raining heavily and the existing bush conditions, coupled with deteriorating ground conditions ruled out the possibility of bringing in heavy fire fighting equipment and the use of hand equipment would have been valueless.

4. Sgt. Maguire, after viewing the immediate scene, proceeded back to the DORFLINGER residence to contact our Identification Section, the Department of Transport, Air Sea Rescue Center, New Westminster S/Div., and Okanagan Helicopters, Vancouver, B.C. Cst. Forsyth was detailed to the road entrance of the DORFLINGER property to control anticipated pedestrian and vehicular traffic, which was increasing in volume. DORFLINGER was retained as a guard at the main crash site, and the writer carried out a perimeter search of the crash area, trying to establish how large an area was involved and required guarding pending the arrival of the D.O.T. investigators. Other persons at the scene at this time were, with the exception of DORFLINGER, eye-witnesses who arrived in a couple of instances prior to the police, or who had identified themselves to us and come into the area upon our arrival. They are listed as follows, and their respective statements are attached as indicated.

s.19(1) (a) [redacted] Appendix 'A'.

(Cont'd Page two)

Document disclosed under the Access to Information Act
Document divulgué en vertu de la Loi sur l'accès à l'information

RCMP 6881

CONTINUATION C 237
REV. 1-4-65

RE: Par Frederick Raymond FLETCHER - Sudden Death

PAGE two

s.19(1)

(Cont'd from Page One)

4. (b) [redacted] APPENDIX 'B'

(c) [redacted] APPENDIX 'C'

(d) [redacted] APPENDIX 'D'

(e) [redacted] Appendix 'E'

(f) [redacted] Appendix 'F'

5. The Air Sea Rescue helicopter, from Canadian Forces Base, Comox, Vancouver Island, arrived at the scene at approximately 1:15 P.M., crewed by Capt's R.O. HUGHES and R. RASMUSSEN, Sgt. R.N. GIRARD, and Cpl's K. NED and FRANK, and placed themselves at our disposal. They examined the scene on the ground and aloft and concurred with the police actions taken. They also provided an expendable body bag for the subsequent removal of the human remains. As they could provide no further assistance they departed the scene within the hour.

6. The following representatives of O.K. Helicopter's Ltd., Vancouver, B.C. arrived on the scene via helicopter.

(a) William Donovan CROWE, Pilot and Assistant President

(b) Gordon ASKIN, Chief Engineer

(c) Roderick FRASER, Chief Inspector

PROPERTY OF R.C.M.P.—THIS POLICE RECORD IS SUPPLIED TO YOU BY THE R.C.M. POLICE FOR INFORMATION OF YOUR DEPARTMENT ONLY. IT IS NOT TO BE MADE AVAILABLE TO ANY OTHER AGENCY OR PERSON WITHOUT THE WRITTEN PERMISSION OF THE R.C.M.P.

Upon identifying themselves, they were allowed into the crash area, and also placed their pilot and helicopter at the disposal of our Identification Section and the writer for the purpose of photographs (See photo #1) and for an air examination and view of the crash site.

7. The following members of the D.O.T. arrived on the scene by car.

(a) C. LEYLAND, Regional Superintendent Aircraft Accident Investigation

(b) T.M. YOUNG, Aircraft Accident Investigation

(c) Roy JOBLING, Aircraft Accident Investigation

and assumed responsibility for the investigation. They were advised of our actions thus far and shown where we had found the rotor, main wreckage, and other components and articles originating from the crashed helicopter. They were advised of the eyewitnesses located and arrangements were concluded for interviewing them on the 15 MAR 68 at the Detachment office. The following guards were hired to protect the scene for the D.O.T. members.

(a) Robert GRIFFITHS - [redacted]

(b) Karl DORFLINGER - [redacted]

(Cont'd Page three

Document disclosed under the Access to Information Act
Document divulgué en vertu de la Loi sur l'accès à l'information

RCMP 6881

CONTINUATION C 237
REV. 1-4-65

RE: Par Frederick Raymond FLETCHER - Sudden Death

(Cont'd from Page two) s.19(1)

7. Guards hired, cont'd -

(c) Larry James JOINSON - [redacted]

(d) Conrad MILLER - [redacted]

and the appropriate returns (Form F95) have been submitted.

8. The only articles picked up at the scene prior to the arrival of the D.O.T. members were Items #'s 1, 2 & 3, as listed on form C 246, and they were so advised. The other Items listed were obtained after their arrival and moved only upon receipt of D.O.T. approval.

9. Investigation disclosed that the pilot and only occupant of the helicopter was:

Par Frederick Raymond FLETCHER (Divorced)
c/o Mrs. C. CRUISE - 6376 Collingwood St., Vancouver, B.C.
Born : 30 APR 26, Moose Jaw, Saskatchewan
Next of Kin: Mr. Fred C. FLETCHER (father)
4231 - 8th Ave., Regina, Sask.
Employed by: O.K. Helicopters Ltd., Vancouver, B.C.

The helicopter involved and flown by FLETCHER was:

(a) Fairchild - Hiller

(b) Model # FH - 1100

(c) Canadian Registration # CF-WMO

(d) Owned by O.K. Helicopters Ltd., Vancouver, B.C.

(e) Valued at $120,000.00

PROPERTY OF R.C.M.P.—THIS POLICE RECORD IS SUPPLIED TO YOU BY THE R.C.M.P. FOR INFORMATION OF YOUR DEPARTMENT ONLY. IT IS NOT TO BE MADE KNOWN TO ANY OTHER AGENCY OR PERSON WITHOUT THE WRITTEN PERMISSION OF THE R.C.M.P.

10. The identity of FLETCHER was tentatively established at the crash site and he was then removed to the Columbia Funeral Home, Langley, B.C. His identity was confirmed by his father 15 MAR 68, after viewing the remains and an engraved Masonic Ring removed from the body that he had personally given to his son. A fellow pilot - William Donovan CROWE - O.K. Helicopters also saw FLETCHER take off from Vancouver Airport and confirmed that he was alone at this time.

11. Investigation has disclosed that this flight commenced in Vancouver, B.C., and was unscheduled. FLETCHER was a stand-by pilot. It was being made to the Ruby Creek area near Agassiz, B.C., to take over the charter duties of another O.K. Helicopter that had also crashed on the 14 MAR 68. Information from eye witnesses indicate that the aircraft was proceeding in a normal manner (see attached appendices). All of them agree that initially there was a loud abnormal sound, and then the aircraft fell towards the ground and disappeared below the tree-line, with the main fuselage apparently separated from the main rotor. An explosive sound

(cont'd page four)

Document disclosed under the *Access to Information Act*
Document divulgué en vertu de la *Loi sur l'accès à l'information*

(Cont'd from Page three)

11. Cont'd.....An explosive sound was then heard followed by a pillar of smoke. Examination of the scene and the immediate area disclosed the main rotor in one location, the main wreckage in another location (as indicated in para #3), components and fragments of same scattered widely over a considerable area in a line running N.W. to S.E. (See appendix 'G'). Regarding the initial loud abnormal bang heard by the witnesses, they were questioned closely on this point, and it was established, with some degree of constancy, that the sound was of a mechanical rather than explosive nature. There were no birds seen by witnesses. This, together with the fact that the flight was unscheduled would appear to rule out the possibility of foul play with regard to the aircraft or pilot. The scattered pattern of the wreckage would indicate that the aircraft came apart in the air, as the density of the brush would preclude such lengthy scattering when the fuselage struck the ground.

12. Coroner L.M. McDonald was contacted, ordered removal of the body, an autopsy and an inquest. The autopsy was performed by Dr. A.E. Grant, 10:30 a.m., 15 MAR 68, at the Columbia Funeral Home, Langley, B.C. He confirmed FLETCHER's death at the time of the crash and his findings were:

(a) ANATOMICAL DIAGNOSIS:

1. SEVERE TRAUMA INCLUDING ONE PENETRATING WOUND OF THE SKULL.
2. MULTIPLE FRACTURES TO LEGS.
3. MULTIPLE LACERATIONS OF HEART.
4. MULTIPLE LACERATIONS OF AORTA.
5. EXTENSIVE BURNS TO THE ENTIRE BODY.

(b) CAUSE OF DEATH:

PENETRATING WOUND OF SKULL AND LACERATIONS TO HEART AND AORTA.

13. The Inquest was commenced at 4:00 P.M., 15 MAR 68 at the Columbia Funeral Home, Langley, B.C. for viewing and identification only, Coroner L.M. McDonald presiding, with the following Jury:

s.19(1)

Jens Anton JENSEN -
James Harry WARMAN -
Peter WONG -
Donald James KLICK -
Stephen GANGER -
Joseph Hartwell YOUNG
Dennis Gerald HORGAN -

Witnesses: Father (Sworn) identified FLETCHER. Inquest was then adjourned to 13 MAY 68 to permit D.O.T. to complete their investigation.

PROPERTY OF R.C.M.P.—THIS POLICE RECORD IS SUPPLIED TO YOU BY THE R.C.M. POLICE FOR INFORMATION OF YOUR DEPARTMENT ONLY. IT IS NOT TO BE MADE KNOWN TO ANY OTHER AGENCY OR PERSON WITHOUT THE WRITTEN PERMISSION OF THE R.C.M.P.

(Cont'd page five)

Document disclosed under the *Access to Information Act*
Document divulgué en vertu de la *Loi sur l'accès à l'information*

Par Frederick Raymond FLETCHER - Sudden Death

(Cont'd from Page four)

14. The body of FLETCHER was cremated at the Vancouver Crematorium, Vancouver, B.C., 18 MAR 68. The ashes are still in their custody and it is the wish of the next-of-kin that they be scattered over the mountains. O.K. Helicopter officials advise that within the next 6 weeks when conditions are favourable the ashes will be scattered in the Crown Mountain area north of the Grouse Mountains, North Vancouver, B.C.

15. Next-of-Kin advised. C.O. advised Re: Telex #NWR 426. Forms C 246 completed and attached, original held at this point. Photos taken by Ident. backed and attached, together with Forms C 164. Appendices attached, original statements of witnesses held this point. Sketch of scene attached (Appendix 'G') . The Workmen's Compensation Board are being supplied with particulars of this incident and also advised of Inquest date. The provisions of para #16, AER - reg OP. Man. were complied with.

s.19(1)

16. Further to the statement of [redacted] (appendix 'f') it will be noted that his time reference is 9:30 A.M. This was brought to his attention after all other available witnesses had been questioned by the writer and he admitted that he had erred and his time estimate should have been around 12:00 NN on the day in question.

S.U.I.

D.D. 15-6-68

PROPERTY OF R.C.M.P.—THIS POLICE RECORD IS SUPPLIED TO YOU BY THE R.C.M. POLICE FOR INFORMATION OF YOUR DEPARTMENT ONLY. IT IS NOT TO BE MADE KNOWN TO ANY OTHER AGENCY OR PERSON WITHOUT THE WRITTEN PERMISSION OF THE R. C. M. P.

Wm. J. Stacey Cpl.
(W.J.R. Stacey) #16069.
Langley Municipal Det.

for (W.I.M.) Sgt. A.D.C.
i/c Det.

68NW 500-39
CO "E" DIV RCMP

FORWARDED 2-4-68, for your information. The file subject left Vancouver in the aircraft, destination Ruby Creek, B.C. While passing over the DORFLINGER property near Aldergrove, B.C., an abnormal sound was heard by witnesses. The rotor blades separated from the fuselage and the aircraft crashed to the ground and burned. The file subject, who was the pilot and alone, was fatally injured and burned.

2. There was no indication of foul play in this case and it was determined that there was a mechanical malfunction. Refer to paragraph 11 in this connection.

3. The results of the autopsy and cause of death are given in paragraph 12. Results of the Inquest are awaited.

4. Copy of statements, photographs, Forms C-164 and C-246, sketch of the scene of the crash are attached as noted in paragraph 15.

S.U.I.

(H.E. Bloxham) Supt.,
O.C. New Westminster Sub/Division

Document disclosed under the *Access to Information Act*
Document divulgué en vertu de la *Loi sur l'accès à l'information*

RE: OBJET.
Par FLETCHER - Sudden Death

PAGE

s.19(1)

APPENDIX 'A'

1:45 P.m., 15 MAR 68

STATEMENT of [redacted]

On March 14th, 1968, a little bit before twelve, I was sitting with my friend, [redacted] on the dike at the bottom of the bluff. From where I was sitting the helicopter was crossing my field of vision. I heard the helicopter before I looked at it. I wouldn't have bothered to look at the machine except that I heard this unusual sound, like a sharp crack and when I looked the helicopter was in a steep dive, and above it at least a tree length distance, was some fluttering objects. The 'copter made no noise as it was falling, and there was silence until it hit the ground. Then there was a hell of a bang! A second or so later there was a dull whoosh and then the smoke rose in the air. There was nothing that I could hear or see in the sky at the time I looked at the helicopter. It was cloudy, with no rain and no wind where I was sitting. I don't know which way the helicopter was going, but it fell from west to east.

WITNESS:

Cpl. W.J. Stacey,
R.C.M.P.

(Signed) [redacted]

PROPERTY OF R.C.M.P.—THIS POLICE RECORD IS SUPPLIED TO YOU BY THE R.C.M. POLICE FOR INFORMATION OF YOUR DEPARTMENT ONLY. IT IS NOT TO BE MADE KNOWN TO ANY OTHER AGENCY OR PERSON WITHOUT THE WRITTEN PERMISSION OF THE R.C.M.P.

Document disclosed under the *Access to Information Act*
Document divulgué en vertu de la *Loi sur l'accès à l'information*

s.19(1)

12:40 P.M. 15 MAR 68

STATEMENT of [redacted] B.C.
(no phone)

On March 14th, 1968, I was sitting with my neighbour at lunch time on the dike about a quarter mile from the crash scene at the bottom of the bluff. My neighbour is [redacted] We were talking and we heard the helicopter was heading east, it was chopping away normally. I heard it approaching only for a short time, at the very most only thirty seconds. I looked at it because the motor didn't sound right and was louder than the chopping noise. Then there was a sputtering and all noise stopped. I saw the helicopter tilting over fairly high above the tree line, surrounded by drifting chunks. Then the helicopter nosed down steeply. The machine dove straight down without whirling or tumbling, and went out of sight into the trees. There was a thud and then a whoosh. I did not see any smoke until after I got to the crash area. It was cloudy at the time and not raining. There was no wind where I was at this time.

Witness:

Cpl. W.J. Stacey

(Signed) [redacted]

PROPERTY OF R.C.M.P.—THIS POLICE RECORD IS SUPPLIED TO YOU BY THE R.C.M. POLICE FOR INFORMATION OF YOUR DEPARTMENT ONLY. IT IS NOT TO BE MADE AVAILABLE TO ANY OTHER AGENCY OR PERSON WITHOUT THE WRITTEN PERMISSION OF THE R.C.M.P.

Document disclosed under the *Access to Information Act*
Document divulgué en vertu de la *Loi sur l'accès à l'information*

s.19(1)

12:15 P.M. 15 MAR 68

STATEMENT of [redacted]

Around noon, I'm not sure of the exact time on the 14th day of March, 1968, I was in my barn with the tractor running, when I heard a loud noise. I ran outside and saw this helicopter heading into the ground, surrounded by a lot of debris in the air, that I thought was paper or fabric. The machine appeared to be intact, the tail and body was in one piece. I was looking southwest, and the helicopter was falling from my right to my left in an easterly direction at a very steep angle. I heard a thud and an explosion followed by a cloud of smoke. I did not see the aircraft hit the ground. I can't say whether it was raining or not, and it was cloudy. It was not windy where I was in the valley. There were no other aircraft or birds in the air while I was looking at the helicopter. When I first saw the helicopter it was something like a hundred feet above the trees at the top of the bluff.

Witness:

Cpl. W.J. Stacey,
R.C.M.P.

(Signed) [redacted]

PROPERTY OF R.C.M.P. — THIS POLICE RECORD IS SUPPLIED TO YOU BY THE R.C.M. POLICE FOR INFORMATION OF YOUR DEPARTMENT ONLY. IT IS NOT TO BE MADE KNOWN TO ANY OTHER AGENCY OR PERSON WITHOUT THE WRITTEN PERMISSION OF THE R.C.M.P.

Document disclosed under the *Access to Information Act*
Document divulgué en vertu de la *Loi sur l'accès à l'information*

s.19(1)

11:50 A.M. 15 MAR 68

STATEMENT of [redacted]

On March 14th, 1968, at approximately 11:45 A.M., I had just stepped out in front of the house, and saw a helicopter on the top of the Jackman Hill, just north of Dorflinger's house. The helicopter seemed to be going west toward Vancouver. It was about 75 feet above the tree tops. There was a loud hammering noise like when they turn, and then there was a sharp crack. The helicopter was flying straight and level. After the loud crack some long object flew off of the machine from the top of it. I was about a quarter of a mile away and looking uphill. The 'copter made a sharp right turn to the north, tilted over on its side and headed down nose first at about an 80° angle. The tail assembly was still on as far as I could still see. It disappeared in the trees and there was a loud thump, the trees hid any smoke that might have come from the ground. I saw no other objects come off of the machine. It was overcast, with a steady wind at this time. I think the wind was blowing west, and very light. I don't think it was raining. I saw nothing in the air except the helicopter.

Witness:

Cpl. W.J. Stacey,
R.C.M.P.

Signed: [redacted]

PROPERTY OF R.C.M.P.—THIS POLICE RECORD IS SUPPLIED TO YOU BY THE R.C.M. POLICE FOR INFORMATION OF YOUR DEPARTMENT ONLY. IT IS NOT TO BE MADE KNOWN TO ANY OTHER AGENCY OR PERSON WITHOUT THE WRITTEN PERMISSION OF THE R.C.M.P.

Document disclosed under the *Access to Information Act*
Document divulgué en vertu de la *Loi sur l'accès à l'information*

RE: OBJET.
Par FLETCHER - Sudden Death

APPENDIX 'E'

s.19(1)

11:15 A.M. 15 MAR 68

STATEMENT of [redacted]

Around ten minutes to twelve I was going into the house for lunch and it was kind of windy. I heard a helicopter and saw it coming from the direction of Vancouver. The engine sounded odd. I had a good view of it. The helicopter was way higher than the trees on top of the bluff. I saw something fly off of the machine, it was quite long and fell over the back of the plane and flew away. Then the body of the helicopter seemed to fall straight down in one piece into the trees and then there was a cloud of smoke accompanied with a thump. It was cloudy at the time, but quite clear. It was not raining. The machine looked orange coloured. The machine was flying straight and level. The only thing I saw in the air at this time was the helicopter. I would be about a mile and one half away from the plane when this happened.

Witness:

Cpl. W.J. Stacey
R.C.M.P.

(Signed)
[redacted]

PROPERTY OF R.C.M.P.—THIS POLICE RECORD IS SUPPLIED TO YOU BY THE R.C.M. POLICE FOR INFORMATION OF YOUR DEPARTMENT ONLY. IT IS NOT TO BE MADE KNOWN TO ANY OTHER AGENCY OR PERSON WITHOUT THE WRITTEN PERMISSION OF THE R.C.M.P.

Document disclosed under the *Access to Information Act*
Document divulgué en vertu de la *Loi sur l'accès à l'information*

RE: OBJET.
Par FLETCHER - Sudden Death

PAGE

APPENDIX 'F'

s.19(1)

10:45 A.M. 15 MAR 68

STATEMENT of [redacted]

On March 14th, 1968, at approximately 9:30 A.M., I was on Jackman Road, walking north towards Karl DORFLINGER's about one half mile south of his farm. I heard a helicopter coming over from the east. It was coming from the direction of Abbotsford. I looked up, saw the helicopter at about 200 feet high, flying in a straight line. I could hear the motor running, then all of a sudden I heard a bang and the helicopter was even with Jackman Road, and ahead of me. The bang was dull like stumping powder. Then the helicopter started to fall and went into the bush. I did not see anything come off of the helicopter. There was another crash, very loud, which shook the ground, and then I could see smoke. It was raining, not too hard, I do not recall any wind. It was fairly clear and not hard to see. When I heard the bang I was watching the helicopter, and I did not see any smoke come from it. It started to tumble end over end into the bush. I did not see any lights on the helicopter.

Witness:

Cpl. W.J. Stacey

(Signed) [redacted]

PROPERTY OF R.C.M.P. — THIS POLICE RECORD IS SUPPLIED TO YOU BY THE R.C.M. POLICE FOR INFORMATION OF YOUR DEPARTMENT ONLY. IT IS NOT TO BE MADE KNOWN TO ANY OTHER AGENCY OR PERSON WITHOUT THE WRITTEN PERMISSION OF THE R.C.M.P.

Document disclosed under the Access to Information Act
Document divulgué en vertu de la Loi sur l'accès à l'information

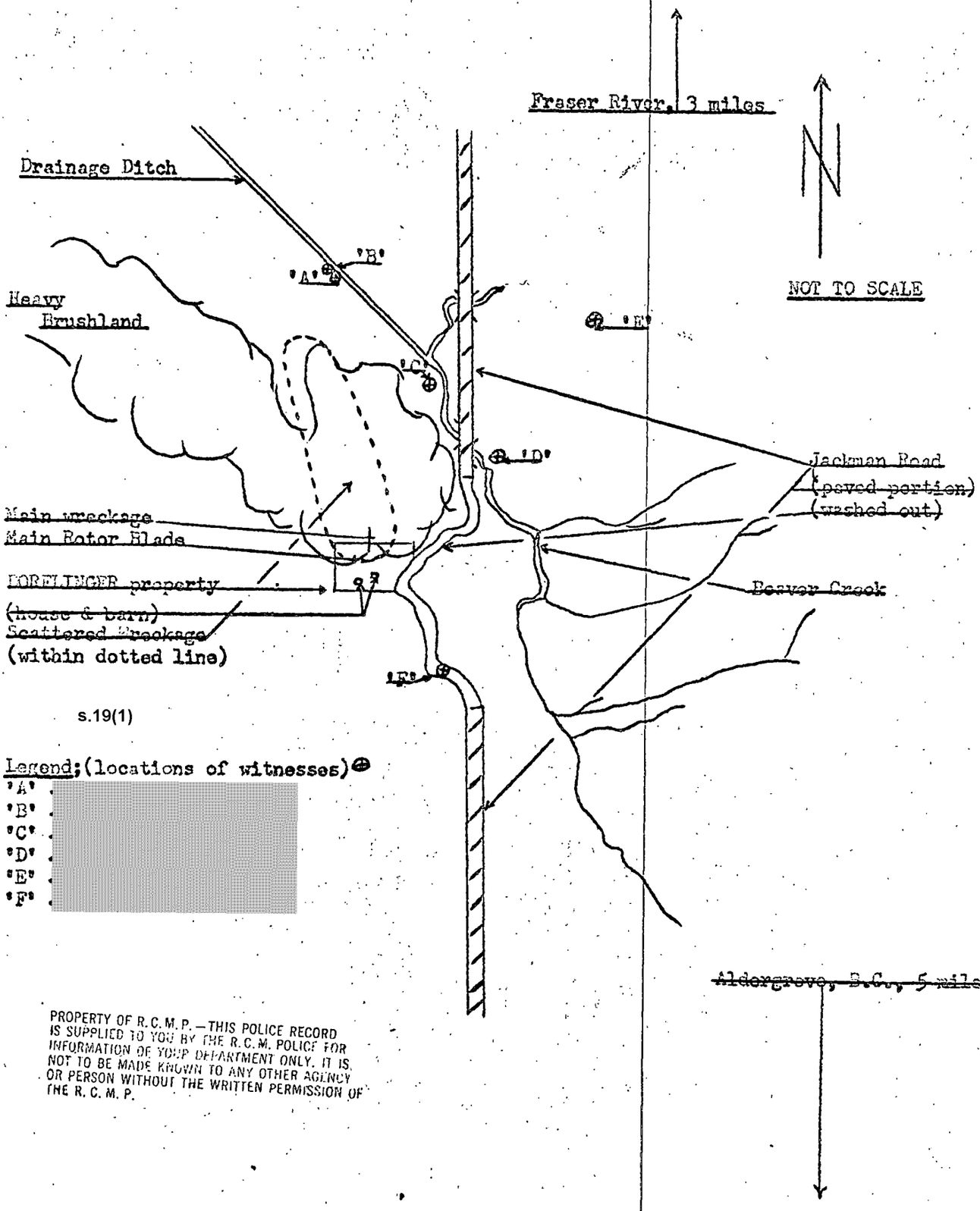

s.19(1)

Legend;(locations of witnesses)

'A' [redacted]
'B'
'C'
'D'
'E'
'F'

PROPERTY OF R.C.M.P. — THIS POLICE RECORD IS SUPPLIED TO YOU BY THE R.C.M. POLICE FOR INFORMATION OF YOUR DEPARTMENT ONLY. IT IS NOT TO BE MADE KNOWN TO ANY OTHER AGENCY OR PERSON WITHOUT THE WRITTEN PERMISSION OF THE R.C.M.P.

Document disclosed under the *Access to Information Act*
Document divulgué en vertu de la *Loi sur l'accès à l'information*

APPENDIX 17

REGISTERED

5002-715 (AAV)

739 West Hastings Street,
Vancouver 1, B.C.
May 8, 1968.

The Coroner,
C/O R.C.M.Police,
Langley Municipal Detachment,
Box 280,
Langley, B.C.

Dear Sir:

The following is a statement of fact as determined in our investigation into the accident to Hiller FH-1100 helicopter, registration CF-WMO, March 14, 1968, approximately 5 miles east of Fort Langley, B.C., on behalf of the Department of Transport.

1. A Certificate of Registration had been issued for the helicopter and was valid at the time of the accident.

2. A Certificate of Airworthiness had been issued for the helicopter and was valid at the time of the accident.

3. The pilot held a valid Airline Transport Pilot Licence, endorsed for Hiller FH-1100 helicopters, and had adequate experience to conduct the flight.

4. Evidence at the accident scene indicates that the helicopter had started to disentigrate in the air. Parts of the helicopter and contents were strewn over a large area with the main rotor assembly located 420 feet southwest of the main wreckage. The helicopter fuselage had struck the ground, in a near vertical nose down attitude, and burned.

5. Examination of the wreckage shows no evidence of interior or exterior objects foreign to the helicopter having caused the initial breakup. Metallurgical examination of the main rotor shaft failure shows no evidence of material faults at the fracture.

6. The primary cause of this accident has not been determined and is still under investigation.

"R.J.J."
R. J. Jobling,
Accident Investigator

"Thomas M.Young"
T. M. Young,
Accident Investigator

Document disclosed under the *Access to Information Act*
Document divulgué en vertu de la *Loi sur l'accès à l'information*

APPENDIX 18

5002-715 (AAV)

739 West Hastings Street,
Vancouver 1, B.C.
May 15, 1968.

Fairchild Hiller,
Aircraft Division,
Hagerstown, Maryland.
U. S. A. 21740

ATTENTION: Mr. James G. Baker,
Supervisor, Field Services.

Dear Sirs:

RE: Accident Hiller FH-1100, CF-WMO
March 14, 1968

We are forwarding one copy of the completed wreckage scatter plot as requested by Mr. Baker, for your perusal and retention. We trust that this scatter plot will be of assistance to you in your investigation concerning this accident.

Also, with regard to the subject accident, we would appreciate receiving the performance data for FH-1100 helicopters requested from Mr. Baker, which was to include -

(a) the effects of rapid reduction of collective control during operation at or near Vne:

(b) the effects of moderate or extreme turbulence:

(c) the recommended Hiller procedure for turbulence penetration under unexpected conditions.

Your co-operation in providing this and any other information which you may have would be of great assistance in our investigation to determine the cause of this accident.

Yours truly,

"T. M. Young"

C. Leyland,
for Regional Superintendent,
Accident Investigation

ENCL

Document disclosed under the *Access to Information Act*
Document divulgué en vertu de la *Loi sur l'accès à l'information*

APPENDIX 19

ADMA, OTTAWA
No. 3 Temporary Bldg.
ATTN: CAIE

5002-715 (AAV)

RDAS, VANCOUVER

July 18, 1968

ACCIDENT - Hiller FH-1100, CF-WMO
March 14, 1968.

1. As requested in our telephone conversation of July 12, 1968, we are sending you the meteorological data obtained from the Vancouver Weather Office.

2. We have also approached Mr. K. F. Harry, Regional Superintendent, General Weather Services, on the feasibility of having weather conditions recorded at the accident scene simultaneous with recordings at Vancouver and Abbotsford. His feelings are that more accurate and useful information could be obtained and conditions duplicated in wind tunnel tests. However, once we receive your letter outlining the information you require we will discuss this with Mr. Harry and be able to give you a more definite answer on the subject.

"T. M. Young"

for Regional Director, Air Services

ENCL

Document disclosed under the *Access to Information Act*
Document divulgué en vertu de la *Loi sur l'accès à l'information*

~~NO. 210 970~~

APPENDIX 21

and 22

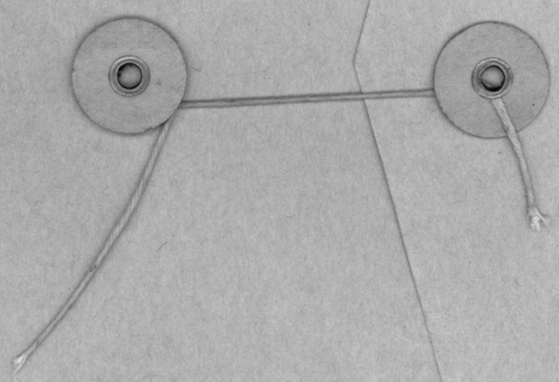

Document disclosed under the *Access to Information Act*
Document divulgué en vertu de la *Loi sur l'accès à l'information*

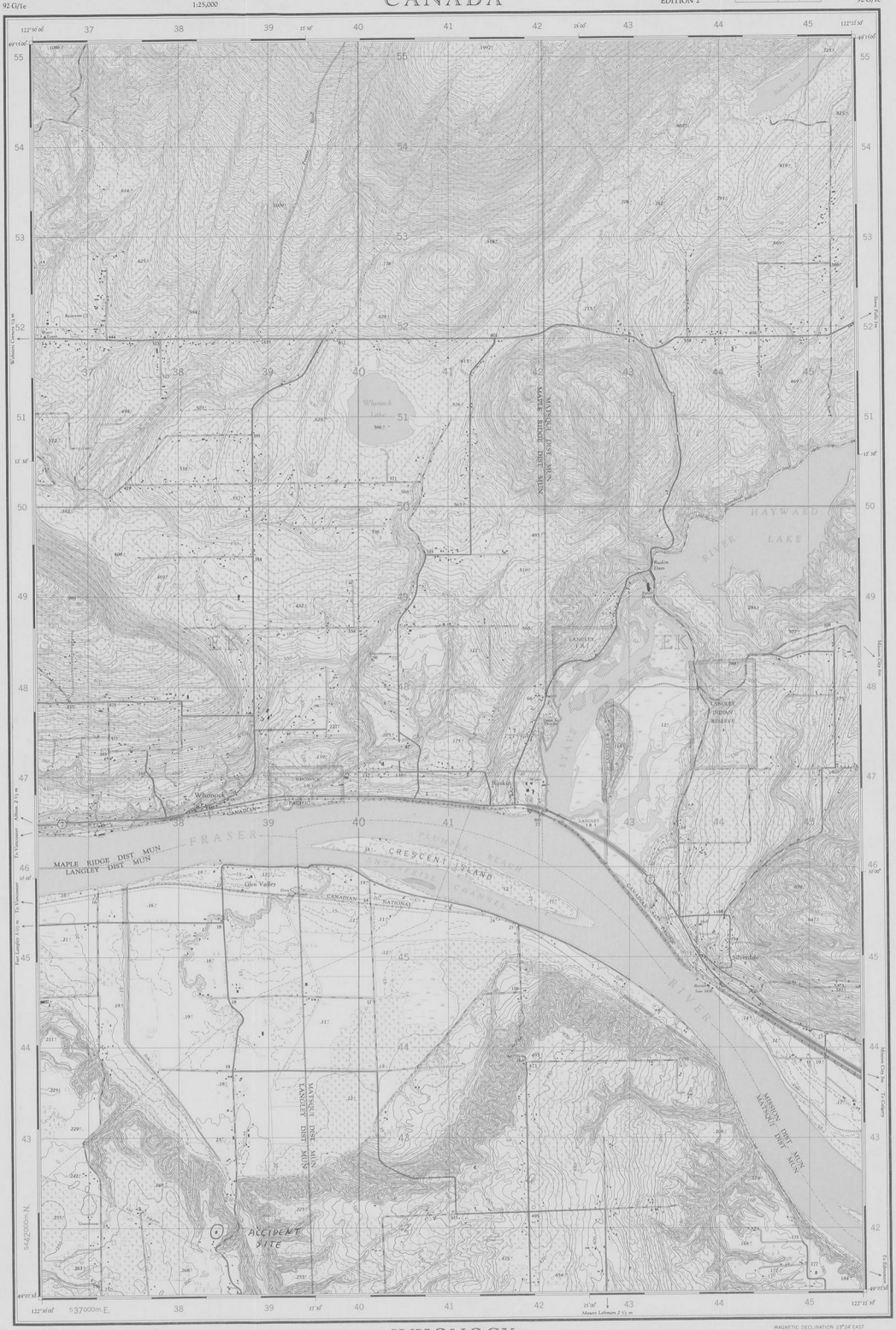

Produced by the ARMY SURVEY ESTABLISHMENT, R.C.E.
Information depicted current as of 1961.

WHONOCK

NEW WESTMINSTER DISTRICT
BRITISH COLUMBIA

SCALE 1:25,000
2.50 Inches to 1 Mile approximately

1961

CONTOUR INTERVAL 10 FEET
AUXILIARY CONTOUR INTERVAL 5 FEET
Elevations in Feet above Mean Sea Level

Transverse Mercator Projection
North American Datum 1927

MAGNETIC DECLINATION 23°.24' EAST
AT CENTRE OF MAP, 1959
Annual magnetic change 2.9' westerly

APPROXIMATE MEAN DECLINATION 1959
FOR CENTRE OF SHEET
Annual magnetic change 2.9' westerly

CONVERSION SCALE FOR ELEVATIONS

GRID ZONE DESIGNATION: 10U
100,000 M. SQUARE IDENTIFICATION: EK

TO GIVE A REFERENCE TO NEAREST 100 METRES
EXAMPLE: WATER TOWER
EASTING: Read number on grid line immediately to left of point. Estimate tenths of a square from this line eastward to point. 42 35
NORTHING: Read number on grid line immediately below point. Estimate tenths of a square from this line northward to point. 44 20
MILITARY GRID REFERENCE: 42044 20
Nearest similar grid reference 100,000 metres (about 62 miles)

ONE THOUSAND METRE
UNIVERSAL TRANSVERSE MERCATOR GRID
ZONE 10

INDEX TO ADJOINING SHEETS

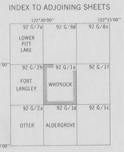

WHONOCK
92 G/1e
EDITION 2

000082

Appendix 4 (A)

Document disclosed under the *Access to Information Act*
Document divulgué en vertu de la *Loi sur l'accès à l'information*



GULLEY
APPROXIMATE WIND DIRECTION
TRAIL
ALDER, BIRCH 4"-18" 80'-100' HIGH
SOME LARGE D BIRCH
ALDER, BIRCH, SOME FIR 4"—24" 30'—110' HIGH
ALDER, BIRCH 2"-8" 20'-60' HIGH
SOME UNDERBRUSH
2'8 FIR 150' HIGH
20'-30' ALDERS, MEDIUM UNDER BRUSH
SCALE — 1"=30'
DETAIL—A
SCALE —— 1"=5'
DE TAIL-B
SCALE 1"=1'-0"
DIRECT CONSCRIPTION
5'8 ALDER
20' HIGH
5'8 ALDER
APPROX
BROKEN BRANCH
ON TO GROUND
BROKEN BRANCH
ON TO GROUND
BROKEN BRANCH
ON TO GROUND

Document disclosed under the *Access to Information Act*
Document divulgué en vertu de la *Loi sur l'accès à l'information*

Department of Transport,
Accident Investigation Division,
Engineering Laboratory,
Building U 62,
NRC Uplands Ottawa
ATTENTION J. Molson

5002-715 (AAV)

Dec.13,1968

RDAS, PACIFIC

ACCIDENT - Hiller FH-1100, CF-WMO

1. The following information has been obtained in answer to your questions regarding the above aircraft:

(a) We have not received the data covering the flight tests which were conducted for Fairchild Hiller Corporation on FH-1100 helicopters. This information will be forwarded when we receive same.

(b) Helicopter CF-WMO had the extended horizontal stabilizer installed at the time of the accident.

(c) Attached is a copy of Service Bulletin FH-1100 - 62 - 1 Removal of Stabilizer Extensions and a telex message from Fairchild Hiller to Okanagan Helicopters.

(d) Attached is a copy of Service Bulletin FH-1100 - 51 - 3 Inspection and Rework of Teetering Stops. Prior to the original issue of this SB, there was no requirement to check the teetering angles.

2. Operators have informed us that FH-1100 helicopters were operated on skid gear with the extended stabilizer because they would fly faster with less power due to the fuselage remaining in a more horizontal attitude in cruise.

3. We have a reported case of a pilot flying in cruise condition at about 120 MPH, and as he wanted to make a fast letdown into a mountain valley he lowered the collective control quite rapidly to go into autorotation. The helicopter immediately pitched nose down about 20-30° with a rapid buildup of speed. His recovery was effected by leaving the cyclic control in the position it had been and pulling on collective pitch. The helicopter recovered from the dive and the pilot then made a slow descent.

4. We will forward any other pertinent information as we receive it. If you have any other questions or require further information on the above please advise us.

J. M. Young
for Regional Director, Air Services

EM:Cain

000084

Document disclosed under the *Access to Information Act*
Document divulgué en vertu de la *Loi sur l'accès à l'information*

CF-WMO

M
CN TELS VCR TLO
ROTORS VCR

CNT NO CK
P DCTL FA HAGERSTOWN MD APRIL 12/68 445P EST
OKANAGAN HELICOPTERS, ATTN R G ASKIN
VANCOUVER BC
A CONCENTRATED ANALYTICAL AND FLIGHT TEST PROGRAM ON THE FH-1100 IS UNDERWAY TO DETERMINE IF A COMBINATION OF ENVIRONMENTAL DISTRUBANCE OVERSPEED AND CONTROL TECHNIQUE CAN CAUSE A SAFETY OF FLIGHT SITUATION PENDING RESULTS OF THIS PROGRAM OPERATORS ARE ADVISED TO 1. TEMPORARILY OBSERVE AN AIRSPEED LIMITATION OF NO MORE THAN 110 MPH AT ALL TIMES 2. AVOID ANY ABRUPT CONTROL MOVEMENTS WHEN FLYING IN TURBULENCE
FIARCHILD HILLER J E BURKE

FH-1100 1. 110 2.
220P PST

CN TELS VCR TLO
ROTORS VCR

File Phoned St. Q. St. Rosemarine 14:00 hrs 16/4/68 re the above.

Okanagan Helicopters

Document disclosed under the *Access to Information Act*
Document divulgué en vertu de la *Loi sur l'accès à l'information*

Fairchild Hiller

Fred — RJ
Dave — Dave
Frank — FB
Keith — K.R.
Stu — SKS

ZDL

o
ROTORS VCR

FAIRHILL HAG B

TLX PD HAGERSTOWN MD 5/29/68
MR GLEN MCPHERSON
OKANAGAN HELICOPTERS
VANCOUVER BC

CONCERNING THR STATUS OF THE COMPANY SPONSORED FH-1100 ACCIDENT INVESTIGATION THE FOLLOWING MAY BE REPORTED

1. OVER THE PAST MONTH FAIRCHILD HILLER CORP HAS CONDUCTED AND IS CONTINUING EXTENSIVE FLIGHT TESTING AND ANALYTICAL INVESTIGATION INTO POSSIBLE COMBINATIONS OF FLIGHT MODES AND ENVIRONMENTAL CONDITIONS WHICH COULD LEAD TO A FLIGHT SAFETY SITUATION IN THE FH-1100
2. THESE TESTS AND STUDIES ARE NOT YET COMPLETE BUT SO FAR RESULTS INDICATE THE MOST CRITICAL FLIGHT CONDITION IN THE FH-1100 IS THE TRANSIENT MODE BETWEEN FORWARD FLIGHT AND AUTOROTATION IN TURBULENT ENVIRONMENTAL CONDITIONS.
3. TO IMPROVE THE MARGIN OF SAFETY IN THIS FLIGHT MDE TWO FILED SERVICE BULLETINS PLUS A FLIGHT MANUAL REVISION WILL BE ISSUED DURING THE NEXT THIRTY DAYS. BULLETIN NO. 51-3 WILL CALL FOR EACH OPERATOR TO INSPECT AND INSURE THAT MAIN ROTOR TEETER STOPS ARE PER FH-1100 SPEC. BULLETIN NO,Z. 62-1 WILL CALL FOR A MODIFICATION TO THE HORIZONTAL STABILIZER.
4. COMPLIANCE WITH THE TWO SERVICE BULLETINS PLUS FAA APPROVAL OF THE FLIGHT MANUAL REVISION SHOULD RESULT IN EVENTUAL REMOVAL OF THE SELF-IMPOSED SPEED RESTRICTION.
5. IN THE INTERIM OPERATORS ARE URGED TO A.OBSERVE THE EXISTING VNE RESTRICTION B. AVOID ABRUPT CONTROL MOVEMENTS AND C. APPORACH THE TRANSIENT MODE BETWEEN FORWARD FLIGHT AND AUTOROTATION WITH CAUTION

FAIRCHILD HILLER
B S DAVIS
DIRECTOR OF SERVICE

o
ROTORS VCR

FAIRHILL HAG B

Document disclosed under the *Access to Information Act*
Document divulgué en vertu de la *Loi sur l'accès à l'information*

APPENDIX 22

Registration	Purchased	OKH Bulletin #43	OKH Bulletin #54	OKH Bulletin #70
OKR	Jan. 6/68	June 6/68 605:30 hours 10° each blade	June 6/68 605:30 hours	July 20/68 859:45 hours
WMF	Jan. 15/68	May 27/68 133:00 hours 18 1/2°	June 15/68 195:20 hours	July 25/68 325:05 hours
WMG	Jan. 15/68	May 16/68 185:15 hours 19° stop to stop	June 6/68 220:55 hours	July 15/68 313:00 hours
WMH	Jan. 15/68	Jan. 7/69 177:40 hours	June 7/68 220:55 hours	Jan. 7/69 177:40 hours
WMJ	Jan. 15/68	May 18/68 114:15 hours 20°	June 7/68 161:00 hours	Aug. 7/68 242:35 hours
WMK	Jan. 15/68	May 17/68 63:05 hours 17.8°	June 23/68 125:35 hours	Aug. 7/68 168:45 hours
WML	Jan. 15/68	May 20/68 107:50 hours 18°	June 17/68 152:15 hours	July 23/68 247:15 hours
WMM	Jan. 15/68	June 2/68 123:20 hours 18°	June 8/68 135:00 hours	Oct. 31/68 560:00 hours
WMN	Jan. 15/68	May 18/68 207:25 hours 15°	June 21/68 307:25 hours	July 12/68 374:10 hours
WMO	Jan. 15/68			

NOTE: The original S.B. FH1100-62-1 was issued June 17/68 and received in this office June 25/68 and was sent out the same day.

Okanagan Bulletin #54 is the same as S.B. FH1100-51-3 stop

Okanagan Bulletin #70 is the same as S.B. FH1100-62-1 h. stabilizer

Document divulgué en vertu de la *Loi sur l'accès à l'information*

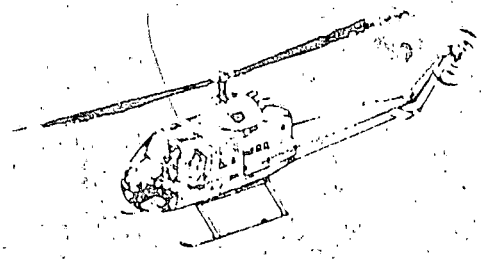

FH-1100 Service Bulletin

TAIL BOOM

REMOVAL OF STABILIZER EXTENSIONS

1. PLANNING INFORMATION.

A. Effectivity.

Model	Manufacturer's Serial Numbers
FH-1100	All aircraft which have extended stabilizers installed and which are operating without inflatable floats.

Aircraft MSN 25, 30, 48, 55, 73, 98 through 106, 109, 110, 117, 121, 122, 124 through 129, 131, 135 and 137 and subsequent will have this modification incorporated prior to delivery if inflatable floats are not specified per Sales Order.

B. Reason. To improve body stability of non-float equipped FH-1100 Helicopters when entering autorotation.

C. Description. The presently installed extended stabilizer is to be reworked to remove the right and left extensions, to install modified fairings, and to stow the position light wiring.

D. Compliance. Within 25 flight hours or two weeks from receipt of kits, whichever occurs first.

E. Approval.

Engineering A. Borwell

Airworthiness H. Hoelzel

Service G. Burke

F. Manpower. Approximately 5.0 man-hours per aircraft.

G. Material Cost and Availability. Kit, P/N SBK-FH1100-62-1A, -62-1C, -62-1B containing the necessary parts to accomplish this modification will be shipped to operators free of charge.

H. Tooling. None.

I. Weight and Balance.

Weight Change	-3.5 pounds
Horizontal Arm	+279.5 inches
Horizontal Moment	-978 pound-inches

J. Reference. FH-1100 Service Manual
FH-1100 Parts Catalog
FH-1100 Flight Manual

2. ACCOMPLISHMENT INSTRUCTIONS.

NOTE: The following instructions are Fairchild Hiller recommended procedures for accomplishing the changes contained in this bulletin. Deviations from the procedures herein contained are permissible, provided the full intent of the modification is accomplished.

PART A. REWORK INSTRUCTIONS.

A. Remove right and left horizontal stabilizer tips. Remove the 12 clips (SL201-5AA11) used as attachment hardware of the tip to stabilizer and retain.

B. Disconnect wires from position lights on stabilizer.

C. Remove screws and washers attaching stabilizer extensions to stabilizer and remove extensions.

NOTE: Pull the wiring through the extension trailing edge only and bundle for re-attachment at the stabilizer trailing edge.

D. Install the 12 clips (SL201-5AA11) removed in Step A. in their original position on the horizontal stabilizer. Right and left sides. Reference Figure No. 1.

E. Remove screws, blocks and nuts securing the fairings and gaskets. Remove fairings and gaskets, right and left side.

Document divulgué en vertu de la Loi sur l'accès à l'information

F. Install new horizontal stabilizer fairings with gaskets on tail boom. Bond gaskets to fairings with Pliobond adhesive or equivalent.

NOTE: Fairings, P/N 24-62000-915 and -916, must be drilled in accordance with instructions in Figure No. 2 and 3.

G. Bond two wedge shaped blocks (24-62000-195) to each stabilizer fairing at the aft fairing-to-stabilizer attach bolt location (one block on top side of fairing and one on bottom side). Use Pliobond adhesive or equivalent.

H. Drill .190 - .196 inch diameter holes through fairings and blocks to match four existing holes in horizontal stabilizer. Spotface blocks to 9/16 inch diameter.

I. Secure horizontal stabilizer to fairings.

J. Position stabilizer tips to horizontal stabilizer.

K. Position the two wire leads, (from stabilizer trailing edge) to the tip position light, and tape and stow excess wire.

NOTE: The excess amount of lead, approximately one foot, to be retained to allow for reinstallation of extended stabilizer in event a float installation is desired.

L. Install stabilizer tips utilizing same hardware from removal.

M. Install screws (AN5158R4), 24 places, in shur-loc nuts left open by extension removal. Notch tip assembly as necessary to clear above screw heads.

N. With power on aircraft, check operation of position lights.

O. After compliance, make appropriate entry in aircraft log and fill out the attached sheet and forward to Service Manager, Fairchild Hiller Corporation, Aircraft Division, Hagerstown, Maryland 21740.

Document disclosed under the Access to Information Act
Pursuant to the Access to Information Act

3. MATERIAL INFORMATION.

The following parts and material are required to accomplish this modification and can be obtained as a kit:

New Part No.	Qty.	Key Word	Old Part No.	Disposition
24-62000-229, -230 Kit A.	2	Fairings (A/C 60 and sub.)	-310, -309	Retain for use in float installation.
24-62000-315, -316 Kit B.	2	Fairings (A/C 60 and sub.)	-313, -314	Retain for use in float installation.
	2	Stabilizer Extension	24-62037-1	
24-62000-915, -916 Kit C.	2	Fairings (A/C 9 thru 59)	-313, -314	Retain for use in float installation.
	24	Washer	AN960-8	Operator's Option
**Pliobond or Equivalent	A/R	Adhesive		
24-62000-85	2	Gasket		
24-62000-195	4	Block		
MIL-L-23053A	A/R	Tubing, Vinyl Heat Shrinkable 1/4" I.D.		
*24-83051	2	Gasket		
*24-83084-3	2	Support Assembly		
*AN507-440R8	4	Screw		
*AN515-4R8	2	Screw		
*AN525-10R7	18	Screw		
*AN525-10R16	2	Screw		
*AN960PD4L	6	Washer		
*AN960-8L	12	Washer		
*AN960-PD10L	2	Washer		
*MS27039-0805	12	Screw		
*NAS623-3-31	2	Screw		
*MS21042L04	6	Nut		
**AN5158R4	24	Screw	MS27039-0804	Operator's Option

*Existing parts to be reused.

** Operator furnished.

Document disclosed under the Access to Information Act
Document divulgué en vertu de la Loi sur l'accès à l'information

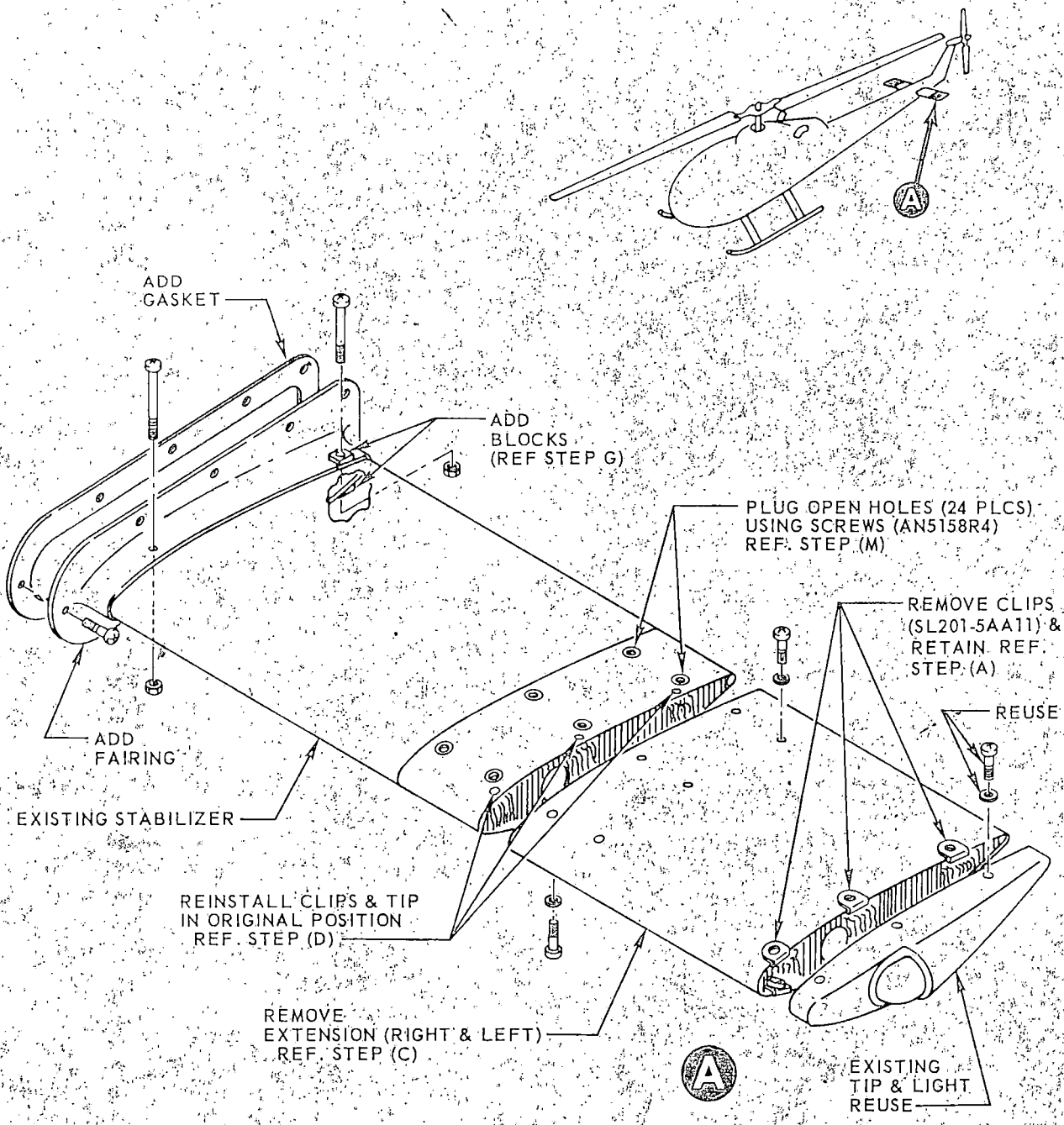

Figure 1

Document divulgué en vertu de la Loi sur l'accès à l'information

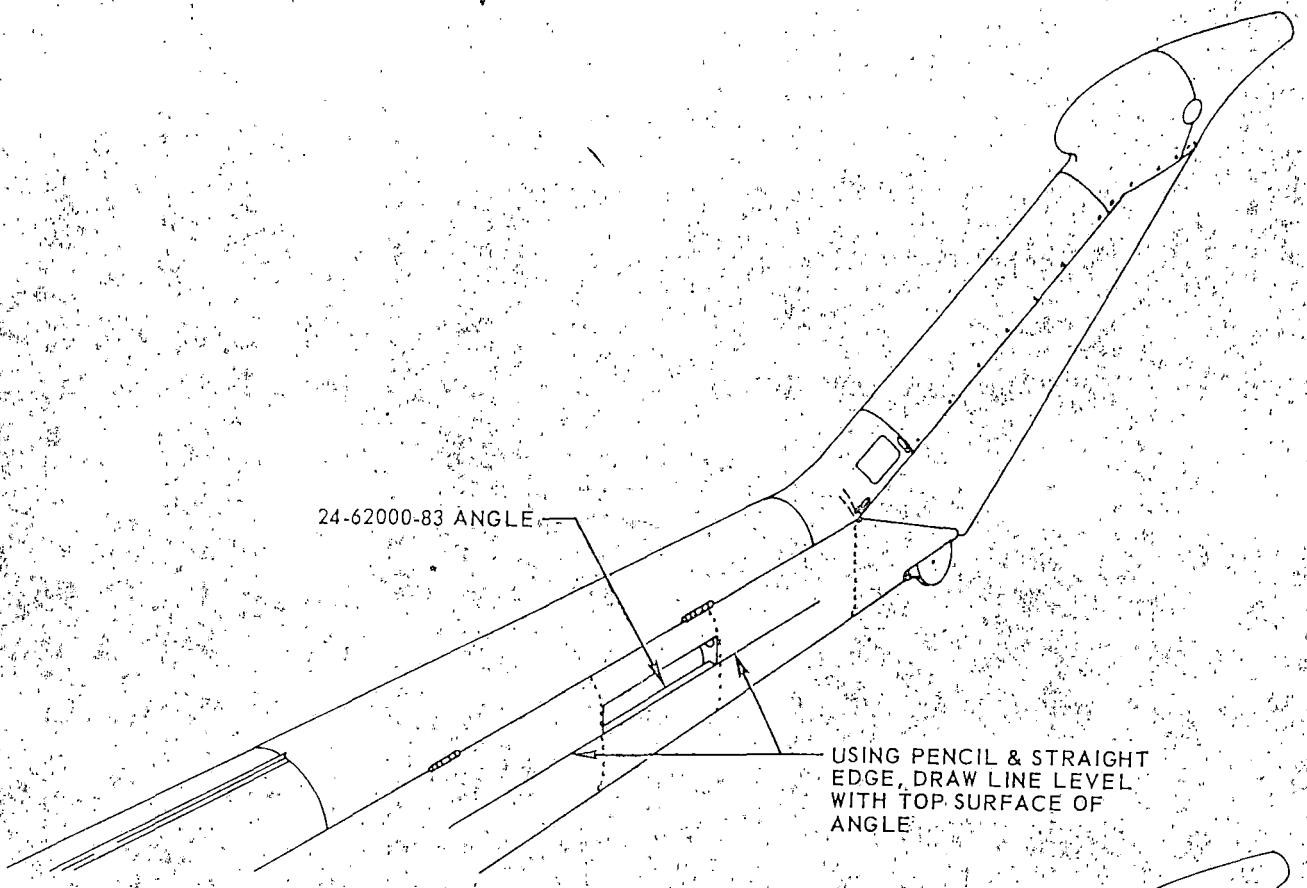

Figure 2

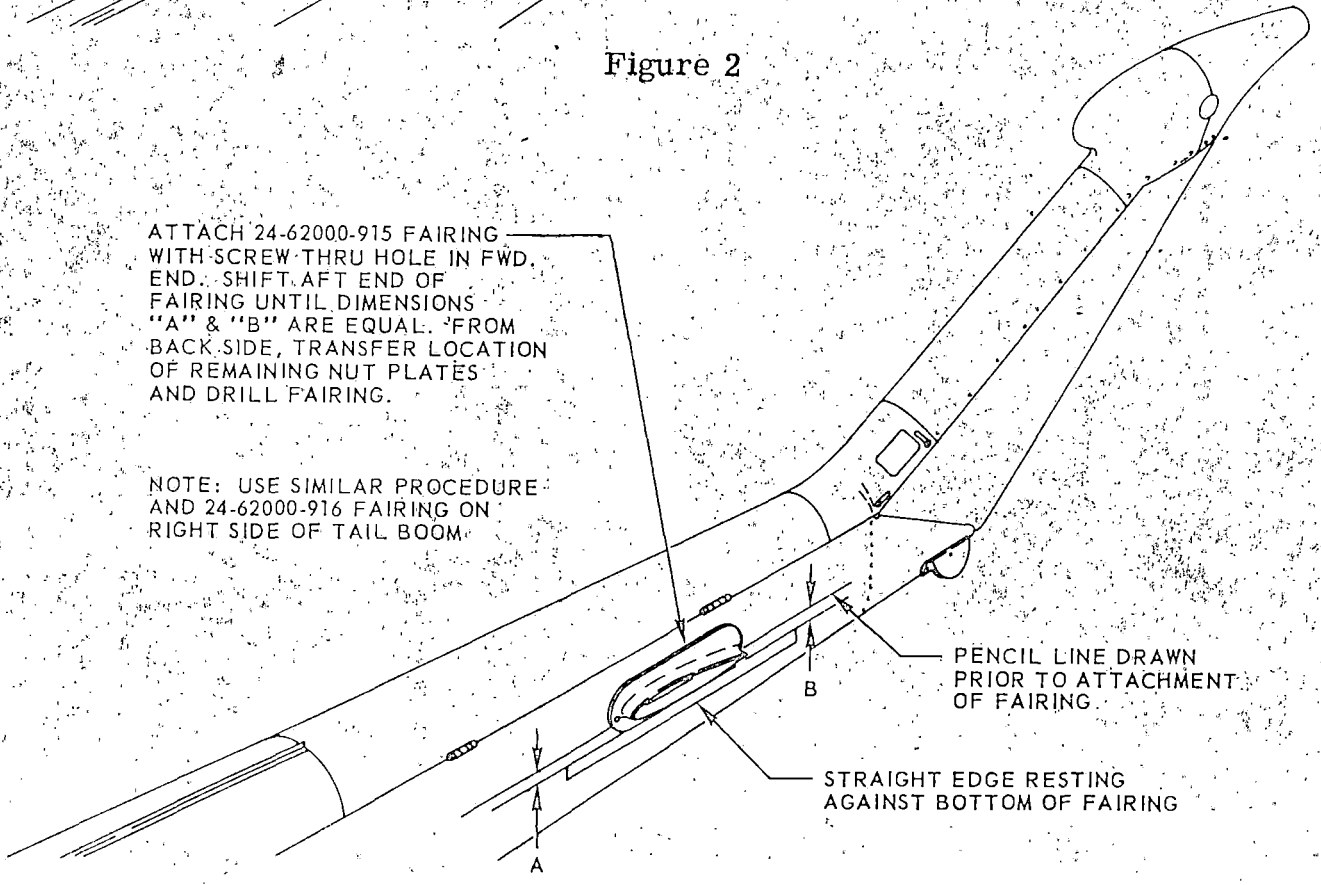

Figure 3

Document has been declassified pursuant to Executive Order 13526

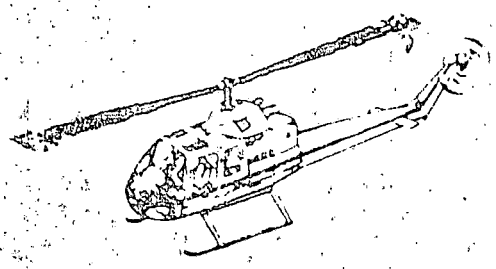

FH-1100 Service Bulletin

MAIN ROTOR ASSEMBLY

INSPECTION AND REWORK OF TEETERING STOPS P/N 24-51423-1 & -13, & P/N 24-51441-21, -23 & -25

1. PLANNING INFORMATION.

A. Effectivity.

Model	Manufacturer's Serial Numbers
FH-1100	10, 12 through 14, 16 through 24, 26 through 29, 31 through 52, 54 through 72, 74 through 84, 86 through 97, 101, 108, 111, 112, 114 through 116, 118 and 120.

Aircraft MSN 9, 11, 15, 25, 30, 53, 73, 85, 98 through 100, 102 through 107, 109, 110, 113, 117, 119, 121 and subsequent will have this modification incorporated prior to delivery.

B. Reason. To inspect and insure the proper manufacturer's specification of the teeter angular dimension.

C. Description. The contents of this bulletin describe the inspection and rework, if necessary, to the teetering stops to assure that the main rotor head has the specified angular movement.

D. Compliance. Within the next 25 hours of flight or two weeks whichever occurs first and concurrently with any replacement of main rotor hub and/or teeter stops on FH-1100 helicopters.

Document divulgué en vertu de la Loi sur l'accès à l'information

E. Approval.

Engineering _____

Airworthiness _____

Service _____

F. Manpower. Approximately five (5) man-hours required for inspection and rework.
(a) Inspection - 1 man-hour
(b) Rework - 4 man-hours

G. Material Cost and Availability. No kits involved. Material to be furnished by operator.

H. Tooling. None.

I. Weight and Balance. The weight and balance change resulting from this modification is negligible.

J. Reference. FH-1100 Service Manual
FH-1100 Parts Catalog

2. ACCOMPLISHMENT INSTRUCTIONS.

NOTE: The following instructions are Fairchild Hiller recommended procedures for accomplishing the inspection and rework contained in this bulletin. Deviations from this procedure are permissible, provided the full intent of the bulletin is accomplished.

A. Inspection.

(1) Ascertain that the teetering stops (24-51423-1 or -13 or 24-51441-21, -23 or -25) are properly installed by insuring that the stops are against the inside radius of the hub. (Figure 1) If a gap exists between the stop and hub, loosen bolts and push stop outboard. Retighten bolts.

(2) Pull the tip of one blade downward until contact is made between the stop and the rotor mast. Hold blade in this position.

(3) Measure the angle of the rotor mast with a propeller protractor. Measure the angle of the lower surface of the rotor hub. The difference between the two readings should allow a teetering angle of 10° (+30' -0').

(4) Repeat steps (2) and (3) for the opposite blade.

(5) If the inspection performed does not allow a teetering angle to fall within the prescribed limits: If under remove the teetering stops (24-51423-1 or -13 or 24-51441-21, -23 or -25) from the rotor hub and rework per Part B. If over, replace stop(s) and proceed in accordance with paragraph 2.A.

CAUTION: Blade ends should be supported when teetering stops are removed.

B. Rework.

(1) Position teetering stop in a vise. Using a three-inch diameter drum sander installed in a hand drill or drill press, sand the area of the stop that contacts the rotor shaft. Remove as little material as necessary to increase the angle of teeter. Maintain same profile on stop surface being reworked. See Figure 1. Exercise caution not to remove material in excess of tolerance.

(2) Install teetering stop and repeat step (2) and (3) of Section A.

(3) Repeat steps (1) and (2) of Section B as often as necessary to produce the required teetering angle for both stops.

(4) When all rework is completed, remove all sharp edges in rework area by maintaining a .06-.07 radius. Penetrant inspect per MIL-I-25135.

(5) Anodic coat per MIL-C-5541A, Grade B, Type I (brush application) rework area of stops.

(6) Zinc Chromate two coats (MIL-P-8585).

(7) Finish with two coats of silver lacquer (TT-L-32).

(8) Color match mark hub and teeter stop using same code as for balancing, i.e., paint blue and/or yellow stripes 1/4" wide on hub and stops to match blade markings. (See Figure 1.)

Document divulgué en vertu de la Loi sur l'accès à l'information

C. Re-installation.

(1) Install teeter stops against the lower side of the rotor hub assembly with four (4) bolts (AN6-11A), four (4) washers (AN960-PD416) and four (4) nuts (MS20365-624A).

(2) Ascertain that the back of the stop is against the inside radius of rotor hub. (Figure 1.)

(3) Torque bolts to 160-190 pound-inches.

(4) Repeat angular dimension inspection in accordance with paragraph 2.A.

(5) After compliance, make entry in aircraft log, and fill out the attached sheet and forward to Service Manager, Fairchild Hiller Corporation, Aircraft Division, Hagerstown, Maryland 21740.

(6) Note at bottom of page 51-3 of FH-1100 Service Manual - "Refer to S.B. FH-1100-51-3 for Main Rotor Hub and/or Teeter Stop Replacement."

3. MATERIAL INFORMATION.

*MIL-P-8585	A/R	Zinc Chromate
*TT-L-32	A/R	Silver Lacquer
*MIL-C-5541A	A/R	Brush-On Anodize

*Operator furnished.

Document disclosed under the Access to Information Act
Document divulgué en vertu de la Loi sur l'accès à l'information

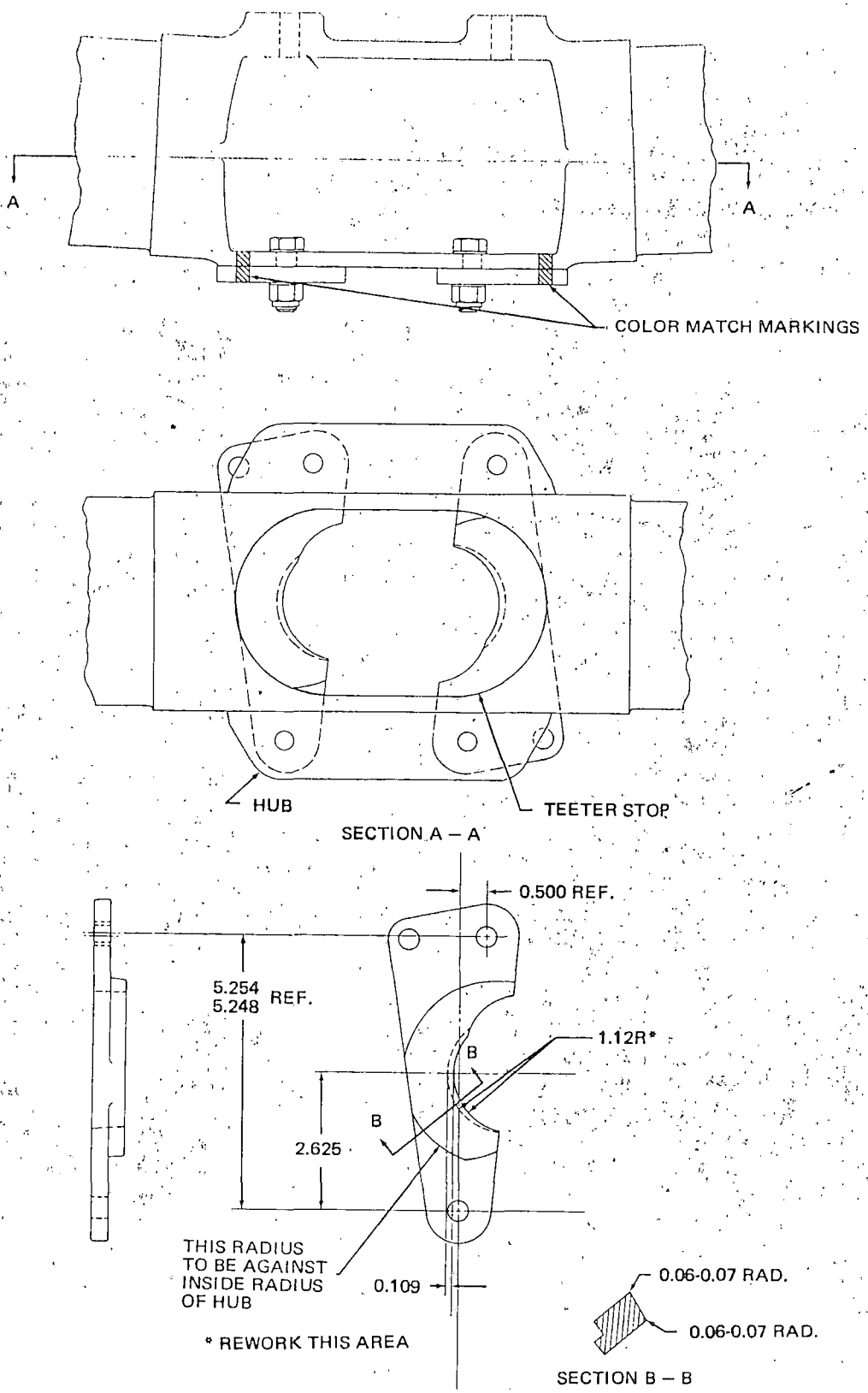

Figure 1

Document disclosed under the *Access to Information Act*
Document divulgué en vertu de la *Loi sur l'accès à l'information*

DEPARTMENT OF TRANSPORT

MESSAGE FORM

FILE NO. 5002-3796 (CAIE)

DATE April 29, 19 69

COMPLETE THIS SECTION FOR COMMERCIAL MESSAGES ONLY | CHARGE

J.

P.C.A.I. VANCOUVER

C.A.I.E. 19 RE CF-WMO, REGRET LAW OFFICE HAS ADVISED US THAT PROPRIETARY DATA CANNOT BE USED FOR INVESTIGATION BUT SHOULD BE RETURNED.

Phoned in at 3:05

AJWM:MD/WA

AJW MELSON

FOR CAI

38-0014
9-63

FILE COPY

Document disclosed under the Access to Information
Document divulgué en vertu de la Loi sur l'accès à l'informatio

5006530226

OTTAWA
AERADIO

APR 29 18 24 69

ZCZC OHA143

JJ CYHQYY

291817 CYVRRO

CAIE OTTAWA

PCAI 17. REUR CAIE 18. CF/WMO PLS FORWARD COPY OF REQUESTED FLIGHT TEST DATA TO ENABLE US TO COMPLETE OUR ACCIDENT REPORT.

PCAI VANCOUVER

CONFIRMATION COPY
Phoned to MD by GV

Document disclosed under the Access to Info
Document divulgué en vertu de la Loi sur l'accès à l'in

DEPARTMENT OF TRANSPORT

MESSAGE FORM

FILE NO. 5002-3796 (CAIE)

DATE April 28, 19 69

COMPLETE THIS SECTION FOR COMMERCIAL MESSAGES ONLY | CHARGE

P.C.A.I. VANCOUVER

CAIE 18 RE CF-WMO, YOUR REF 5002-715(PCAI) AND LETTER DATED DEC. 13, 1968 PARA (A). PLEASE DISCONTINUE ATTEMPTS TO OBTAIN FLIGHT TEST DATA. SEND YOUR ACCIDENT REPORT AND ALL AVAILABLE INFORMATION TO HEADQUARTERS AS SOON AS POSSIBLE FOR ~~WINDUP~~ completion OF INVESTIGATION.

Phoned in at 3:15

A.J.W. MELSON

FOR CAI

AJWM:MD / G.L

38-0014
9-63

FILE COPY

Document disclosed under the *Access to Information Act*
Document divulgué en vertu de la *Loi sur l'accès à l'information*

Rm 85-8
Kennedy

FAIRCHILD HILLER
AIRCRAFT DIVISION

April 23, 1969
Refer: LD-J-188

Department of Transport
C. A. I. E.
No. 3 Temporary Building
Ottawa 4, Ontario, Canada

Attention: Mr. A. J. W. Melson

RE: Accident, Hiller FH-1100, CF-WMO
Approx. 5 miles E. of Fort Langley
British Columbia, March 14, 1968

Dear Mr. Melson:

Per our discussion on April 16, 1969, I am enclosing copies of two reports which were prepared by Progressive Aviation Ltd. at our request for an independent investigation of certain characteristics of our FH-1100 helicopter relating to motion and turbulence. These reports are concluded with certain recommendations, some of which we have evaluated and adopted.

These reports were furnished to the FAA Eastern region, and now to your office, voluntarily with the understanding that they are to be treated as Fairchild proprietary items and not to be made available to anyone else.

If there are any questions or comments, I would be most appreciative if you direct them to my office.

Very truly yours,

FAIRCHILD HILLER CORPORATION
Aircraft Division

Reese I. Joye, Jr.
Chief Counsel

lm

Document disclosed under the *Access to Information Act*
Document divulgué en vertu de la *Loi sur l'accès à l'information*

5002-3796 (CAIE)

C.A.I.E.,
No. 3 Temporary Bldg.,
Ottawa 4, Ontario,
April 17, 1969.

Manning, Bruce, Macdonald & Macintosh,
Barristers & Solicitors,
85 Richmond Street West,
Toronto 1, Ontario.

Attention: Mr. E.M. Lane

Dear Mr. Lane:

Re: Accident Hiller FH1100,
CF-WMO - 14 March 1968

In reply to your letter of March 21, 1969, requesting an indication as to the status of our investigation, it is not yet possible to say when the report might be completed.

We will send you an advance copy as soon as it is approved.

Yours truly

Original Signed by
A. J. W. MELSON

A.J.W. Melson
for Chief Accident Investigation Division.

AJWM/MD

Document disclosed under the *Access to Information Act*
Document divulgué en vertu de la *Loi sur l'accès à l'information*

P.C.A.I. Vancouver
(Attention: Mr. T.M. Yound)

5002-715(AAV)

5002-3796(CAIE)

C.A.I. Ottawa

March 26, 1969.

Accident: Hiller FH1100, CF-WMO
March 14, 1968

1. Enclosed are copies of correspondence from this accident file for your information.

Original Signed by
A. J. W. MELSON

A.J.W. Melson
for Chief, Accident Investigation Division

Encl.

AJWM:MD

Document disclosed under the Access to Information Act
Document divulgué en vertu de la Loi sur l'accès à l'information

5002-3796

Manning, Bruce, Macdonald & Macintosh

Barristers & Solicitors

CAIE Copy

H. E. Manning, Q.C.
Maxwell Bruce, Q.C.
Alastair R. Paterson, Q.C.
Peter H. H. Ridout, Q.C.
Peter Brooke Bell
Eric M. Lane
Ian C. C. Balfour
Peter R. Hylton
Bradley J. Chapman

H. F. Kimber, Q.C.
A. B. Whitelaw, Q.C.
R. D. Poupore, Q.C.
George W. Edmonds, Q.C.
N. W. R. Boyes
H. D. Wilkins
Charles E. Evans
John D. Hylton
J. M. Banfill

85 Richmond Street West
Toronto 1, Canada

Telephone (416) 362-6041

Cable Addresses "Mantor"
Telex 02-21375 "Macdon"

34987

March 21, 1969

A. N. LeCheminant, Esq.,
Accident Investigation Division,
Department of Transport,
No. 3 Temporary Building,
Ottawa 4, Ontario.

Dear Sir,

re: Accident: March 14, 1968 CF-WMO
Your Ref: 5002-3796 (CAIE)

I realise that your department is still involved in the investigation into the cause of this particular accident and it occurs to me that some information which recently came into our possession, may be of some relevance in your deliberations.

You will recall that in our letter of January 27th we suggested the possibility of some connection between the speed limitation imposed on the FH-1100 aircraft, the installation of the stabilizer extensions, the manufacturers specifications with respect to the positioning of the teetering stops, and the possible failure to test the modified version of the aircraft to ensure acceptable stability at all permissible flight configurations.

There would appear to be no doubt that at the time Okanagan ordered a number of FH-1100 helicopters from Hiller, the manufacturer was aware of a possible dangerous situation which could occur when the aircraft was operated at the light load, high speed edge of the permissible envelope and encountered turbulence which required the pilot to reduce speed rapidly. We understand that some studies were done just prior to the Fairchild Hiller move from Palo Alto to Hagerstown which indicated that the FH-1100 had sufficient control capability at all weights and C of G locations and manoeuvres except for one. It would appear

Document disclosed under the *Access to Information Act*
Document divulgué en vertu de la *Loi sur l'accès à l'information*

CASE
19/2

Document disclosed under the *Access to Information Act*
Document divulgué en vertu de la *Loi sur l'accès à l'information*

that the re-designing of the stabilizers was a hasty attempt to permit the envelope to remain intact and that sufficient tests were not performed before the modification was approved and issued to the public.

If any of this information is either helpful or even provocative it will have served our purposes. Would it be possible for you to let us have some indication as to the status of your investigation and possibly when it might be complete and the report capable of submission.

Thank you for your co-operation.

Yours truly,
MANNING, BRUCE, MACDONALD & MACINTOSH

per:

EML:ml

Document disclosed under the Access to Information Act
Document divulgué en vertu de la Loi sur l'accès à l'information

5002-3796

Manning, Bruce, Macdonald & Macintosh

Barristers & Solicitors

H. E. Manning, Q.C.
Maxwell Bruce, Q.C.
Alastair R. Paterson, Q.C.
Peter H. H. Ridout, Q.C.
Peter Brooke Bell
Eric M. Lane
Ian C. C. Balfour
Peter R. Hylton
Bradley J. Chapman

H. F. Kimber, Q.C.
A. B. Whitelaw, Q.C.
R. D. Poupore, Q.C.
George W. Edmonds, Q.C.
N. W. R. Boyes
H. D. Wilkins
Charles E. Evans
John D. Hylton
J. M. Banfill

85 Richmond Street West
Toronto 1, Canada

Telephone (416) 362-6041

Cable Addresses "Mantor"
Telex 02-21375 "Macdon"

CAIE 34986

March 21, 1969

Accident Investigation Branch,
Department of Transport,
No. 3 Temporary Building,
Ottawa 4, Ontario.

Dear Sirs,

re: Accident: March 14, 1968
Aircraft: Hiller FH-1100 CF-WMO
Your Ref: 5002-3796 (CAIE)

Would you please record our request for a copy of the advance accident report in this matter as and when the investigation presently under way by your Department is completed.

Thank you for your co-operation.

Yours truly,
MANNING, BRUCE, MACDONALD & MACINTOSH

per:

EML:ml

Document disclosed under the *Access to Information Act*
Document divulgué en vertu de la *Loi sur l'accès à l'information*

CAF
09/2

Document disclosed under the *Access to Information Act*
Document divulgué en vertu de la *Loi sur l'accès à l'information*

FAIRCHILD HILLER
AIRCRAFT DIVISION

March 19, 1969
Refer: LD-J-119

Department of Transport
C.A.I.E.
No. 3 Temporary Building
Ottawa 4, Ontario, Canada

Attention: Mr. A. J. W. Melson

Reference: Your letter, 5002-3796 (CAIE)
dtd. February 21, 1969
Accident, Hiller FH1100, CF-WMO
Approximately 5 miles east of Fort Langley
British Columbia, March 14, 1968

Dear Mr. Melson:

Your letter to Mr. William Harms, Airworthy Coordinator, Fairchild Hiller Corporation, concerning the above cited accident, has been referred to my office for response.

This is to advise that your request is being coordinated with the various affected departments within our Corporation and I will be in touch with you again within the next two weeks.

Very truly yours,

FAIRCHILD HILLER CORPORATION
Aircraft Division

Reese I. Joye, Jr.

Reese I. Joye, Jr.
Chief Counsel and
Director of Contracts and Programs

lm

5002-27-968
Document Disclosed under the Access to Information Act
Document divulgué en vertu de la Loi sur l'accès à l'information

NATIONAL AERONAUTICAL ESTABLISHMENT
ÉTABLISSEMENT AÉRONAUTIQUE NATIONAL

CABLE ADDRESS
ADRESSE TÉLÉGRAPHIQUE "RESEARCH"

PLEASE QUOTE FILE No. M49-10-3
No DE DOSSIER À RAPPELER

NATIONAL RESEARCH COUNCIL OF CANADA
CONSEIL NATIONAL DE RECHERCHES DU CANADA

OTTAWA 7.

February 27, 1969

Mr. A. N. LeCheminant,
Accident Investigation Division,
Department of Transport,
Ottawa, Ontario.

Dear Chem:

Re: Water Tunnel Terrain Model Tests

Enclosed are three photographs of the flow visualization over the model terrain. The dye plumes are released at ground level, tree top level and 600 ft. above the trees. The horizontal scale is slightly greater than the model scale, i.e. 1 in. = 923 ft. as opposed to 1 in. = 100 ft. for the model. The vertical scale is 1 in. = 462 ft. The crash site is 3-1/2 in. or about 300 ft. from the downstream end of the model.

As you are already aware, our effort to identify any unusual flow phenomena resulting from local topographical effects has been inconclusive except that we are able to produce the turbulent boundary layer effects that one would expect over a rough surface. It is unlikely that any further attempts using this modelling technique would be rewarding and I think it would be fair to say that this conclusion would apply to using the same approach at a larger scale in a wind tunnel. Perhaps we should discuss whether or not you would like us to undertake further measurements.

Yours truly,

R. L. Wardlaw

Enc.

Document disclosed under the *Access to Information Act*
Document divulgué en vertu de la *Loi sur l'accès à l'information*

[redacted] Report

Water Tunnel Terrain
Model Tests
Photographs

Document disclosed under the *Access to Information Act*
Document divulgué en vertu de la *Loi sur l'accès à l'information*

Manning, Bruce, Macdonald & Macintosh — **Barristers & Solicitors**

H. E. Manning, Q.C.
Maxwell Bruce, Q.C.
Alastair R. Paterson, Q.C.
Peter H. H. Ridout, Q.C.
Peter Brooke Bell
Eric M. Lane
Ian C. C. Balfour
Peter R. Hylton
Bradley J. Chapman

H. F. Kimber, Q.C.
A. B. Whitelaw, Q.C.
R. D. Poupore, Q.C.
George W. Edmonds, Q.C.
N. W. R. Boyes
H. D. Wilkins
Charles E. Evans
John D. Hylton
J. M. Banfill

85 Richmond Street West
Toronto 1, Canada

Telephone (416) 362-6041

Cable Addresses "Mantor"
Telex 02-21375 "Macdon"

February 21, 1969

A. N. LeCheminant, Esq.,
Accident Investigation Division,
Department of Transport,
C.A.I.E., No. 3 Temporary Building,
Ottawa 4, Ontario.

Dear Sir,

re: Okanagan Helicopters Ltd.
Hiller FH1100 - CF-WMO
Accident: March 14, 1968
Your Ref: 5002-3796 (CAIE)

Some time ago when we were discussing other matters in your office, the subject turned to the failure of the main rotor mast in WMO.

I know that your investigation is continuing and I do not wish to interfere in any way, but I did obtain from Mac McCubbin a set of three photographs which clearly indicate the position of the flap stops in relation to the break of the mast. As I recall when we were discussing the matter, we were all somewhat unsure of that exact relationship.

If these photographs are of any assistance to you, you may keep them because I have another set on my file.

Yours truly,

E. M. Lane

EML:ml
Enc.

Document disclosed under the *Access to Information Act*
Document divulgué en vertu de la *Loi sur l'accès à l'information*

5002-3796(CAIE)

C.A.I.E.,
No. 3 Temporary Building,
Ottawa 4, Ontario, Canada,
February 21, 1969.

Fairchild Hiller Corporation,
Helicopter Development Centre,
Farmingdale, L.I.,
New York 11735, U.S.A.

Attention: Mr. William Harms,
Airworthiness Coordinator

Dear Mr. Harms:

Re: Accident, Hiller FH1100, CF-WMO,
Approximately 5 Miles East of FortLangley
British Columbia, March 14, 1968.

We understand that the Fairchild Hiller Corporation carried out a concentrated analytical and flight test program to determine if a combination of environmental disturbance, overspeed and control technique could cause a safety of flight situation. Pending results of this program, the operators were advised to observe an airspeed limitation of 110 mph at all times, and to avoid abrupt control movements when flying in turbulence.

Since the temporary speed restriction has been lifted, we assume that this program has been done. Would you please send us the results of this program, including the effects of the extended stabilizer.

We have previously requested this information from the Fairchild Hiller representative in Ottawa. They replied that this information was available from the FAA. A letter to the FAA requesting this information brought the reply, (copy enclosed), that you would supply any information that we desired.

If your report is not available, could you please supply the following engineering data:

1. M_u - pitching moment coefficient due to forward velocity.
   L_v - rolling moment coefficient due to side velocity.
   $M\alpha$ - pitching moment coefficient due to angle of attack.
   M_q - pitch damping coefficient due to pitch angular rate. } *

* For normal, extended, and modified stabilizer (with trim tab).

.....2

Document disclosed under the *Access to Information Act*
Document divulgué en vertu de la *Loi sur l'accès à l'information*

2. Aircraft moments of inertia, I_x, I_y, I_z (maximum and minimum values, slug ft.^{2}).

3. h_r - height of rotor hub above helicopter C.G. (maximum and minimum).

4. Curve of longitudinal cyclic position with speed for normal, extended, and modified stabilizer with trim tab. This is required for level flight.

Yours truly,

Original Signed by
A. J. W. MELSON

(A.J.W. Melson)
for Chief, Accident Investigation Division.

Enclosure

AJWM/MD

000115

Document disclosed under the *Access to Information Act*
Document divulgué en vertu de la *Loi sur l'accès à l'information*

P.C.A.I. Vancouver

5002-715(AAV)

5002-3796(CAIE)

February 19, 1969.

C.A.I. Ottawa

Accident - Hiller FH1100, CF-WMO
- March 14, 1968

1. This is further to our letter dated October 24, 1968. We do not seem to have received a receipted copy of our letter in respect to the pieces of this aircraft which were forwarded in October 1968.

2. Would you please advise if the copy of the letter was returned and if so would you please duplicate.

Original Signed by
A. N. Le CHEMINANT

(A.N. Le Cheminant)
for Chief, Accident Investigation Division.

ANL:MD

Document disclosed under the *Access to Information Act*
Document divulgué en vertu de la *Loi sur l'accès à l'information*

5002-3796(CAIE)

C.A.I.E.,
No. 3 Temporary Building,
Ottawa 4, Ontario,
January 31, 1969.

Manning, Bruce, Macdonald & Macintosh,
Barristers & Solicitors,
85 Richmond Street West,
Toronto 1, Ontario.

ATTENTION: E.M. Lane

Dear Mr. Lane:

Re: Accident, Hiller FH1100, CF-WMO,
Approximately 5 Miles East of
Fort Langley, British Columbia,
March 14, 1968.

In reply to your letter of January 27, 1969, regarding the Fairchild Hiller Bulletins 51-3 and 62-1, we are also trying to obtain information that might establish a connection between these bulletins and the lifting of the speed limitation.

If we receive significant data that is not proprietary, it will be forwarded to you promptly.

Thank you for the copies of the bulletins mentioned in paragraph 1.

Yours truly,

Original Signed by
A. N. Le CHEMINANT

(A.N. le Cheminant)
for Chief, Accident Investigation Division.

AJWM/MD

Document disclosed under the *Access to Information Act*
Document divulgué en vertu de la *Loi sur l'accès à l'information*

Manning, Bruce, Macdonald & Macintosh

Barristers & Solicitors

H. E. Manning, Q.C.
Maxwell Bruce, Q.C.
Alastair R. Paterson, Q.C.
Peter H. H. Ridout, Q.C.
Peter Brooke Bell
Eric M. Lane
Ian C. C. Balfour
Peter R. Hylton
Bradley J. Chapman

H. F. Kimber, Q.C.
A. B. Whitelaw, Q.C.
R. D. Poupore, Q.C.
George W. Edmonds, Q.C.
N. W. R. Boyes
H. D. Wilkins
Charles E. Evans
John D. Hylton
J. M. Banfill

85 Richmond Street West
Toronto 1, Canada

Telephone (416) 362-6041

Cable Addresses "Mantor"
Telex 02-21375 "Macdon"

January 27, 1969

A. N. LeCheminant, Esq.,
Chief, Accident Investigation,
Department of Transport,
No. 3 Temporary Building,
Ottawa 4, Ontario.

Dear Sir,

re: Okanagan Helicopters Ltd.
Accident: March 14, 1968, Langley, B.C.
Aircraft: Hiller FH-1100 CF-WMO

I know that Jack Melson is presently working on this problem and you will recall that we discussed it very briefly when I was in Ottawa.

I have just now had made available to me Fairchild Hiller Bulletins 51-3 and 62-1. It may be that you already have copies of the bulletins in your file but if not they may be of assistance to you.

It has occurred to me that there may be some connection between the speed limitation imposed on these machines, the installation of stabilizers extensions, the inspection and correction to proper manufacturer's specifications of the teetering stops, and the lifting of the air speed restriction on the aircraft with the extended stabilizers without adequate testing to ensure acceptable stability at all permissible speeds. If, as a theory, this seems to be completely off-base to you, perhaps you would be so kind as to tell me so.

Yours truly,
MANNING, BRUCE, MACDONALD & MACINTOSH

per:

EML:ml
Encs.

Document disclosed under the *Access to Information*
Document divulgué en vertu de la *Loi sur l'accès à l'informat*

Fairchild Hiller Bulletins 51-3 + 62-1

Document disclosed under the *Access to Information Act*
Document divulgué en vertu de la *Loi sur l'accès à l'information*

5002-3796(CAIE)

C.A.I.E.,
No. 3 Temporary Bldg.,
Ottawa 4, Ontario,
January 24, 1969.

R.J. Landry Associates Ltd.,
242 City Centre,
880 Wellington Street,
Ottawa 3, Ontario.

Attention: Mr. E.G. Crosby

Dear Mr. Crosby:

Re: Accident, Hiller FH1100, CF-WMO,
Approximately 5 Miles East of
Fort Langley, B.C., March 14, 1968

Subsequent to our letter of October 17, 1968, in which information was requested regarding the results of a flight test program carried out on the FH1100 helicopter, I spoke to Mr. Landry on the telephone. He told me that the Fairchild Hiller Corporation had said that this information was available from the F.A.A. We sent a letter to the F.A.A. requesting the same information (copy enclosed) and received a letter from them yesterday (copy enclosed).

Would you please contact Mr. William Harms for the information required.

Yours truly,

Original Signed by
A. J. W. MELSON

(A.J.W. Melson)
for Chief, Accident Investigation Division.

Enclosure

AJWM/MD

Document disclosed under the *Access to Information Act*
Document divulgué en vertu de la *Loi sur l'accès à l'information*

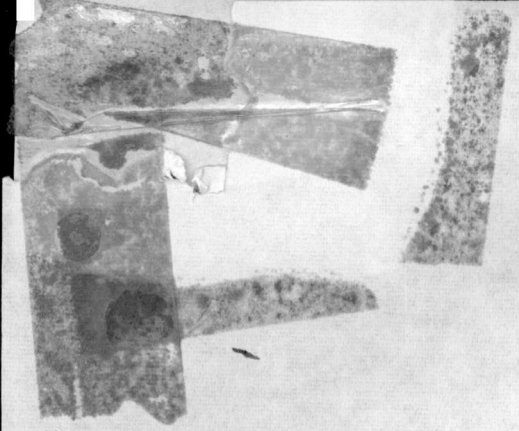

VOL 1

Files 5008-
5002-3796
(CALE)

Jan. 19/69

Accident Investigation
Report of Technical Failure

RECEIVED
FEB 20 1970
C.A.E.

TO: C.A.E.

Your attention is drawn to the ~~engine~~ airframe accessory failure which

occurred on aircraft type F.H.1100 helicopter

registration CF- WMO which was involved in an accident on

March 14, 1968

Details are:-

Main rotor mast failure due to rotor flapping excessively in turbulance.

Noted
the manufacturer has issued a Service Bulletin to prevent further incidents of this nature.
JN
Feb 8/71.

C.J.W. Mebson

Accident Investigation, Technical.

Document disclosed under the *Access to Information Act*
Document divulgué en vertu de la *Loi sur l'accès à l'information*

MEMORANDUM

CLASSIFICATION

TO / A: Department of Transport,
Accident Investigation Division,
Engineering Laboratory,
Building U.62,
NRC Uplands Ottawa
ATTENTION J. Melson

YOUR FILE No. / Votre dossier: 5002-3796

OUR FILE No. / Notre dossier: 5002-715 (AAV)

DATE: Dec.13,1968

FROM / De: RDAS, PACIFIC

FOLD

SUBJECT / Sujet: ACCIDENT - Hiller FH-1100, CF-WMO

1. The following information has been obtained in answer to your questions regarding the above aircraft:

(a) We have not received the data covering the flight tests which were conducted for Fairchild Hiller Corporation on FH-1100 helicopters. This information will be forwarded when we receive same.

(b) Helicopter CF-WMO had the extended horizontal stabilizer installed at the time of the accident.

(c) Attached is a copy of Service Bulletin FH-1100 - 62 - 1 Removal of Stabilizer Extensions and a telex message from Fairchild Hiller to Okanagan Helicopters.

(d) Attached is a copy of Service Bulletin FH-1100 - 51 - 3 Inspection and Rework of Teetering Stops. Prior to the original issue of this SB, there was no requirement to check the teetering angles.

2. Operators have informed us that FH-1100 helicopters were operated on skid gear with the extended stabilizer because they would fly faster with less power due to the fuselage remaining in a more horizontal attitude in cruise.

3. We have a reported case of a pilot flying in cruise condition at about 120 MPH, and as he wanted to make a fast letdown into a mountain valley he lowered the collective control quite rapidly to go into autorotation. The helicopter immediately pitched nose down about 20-30° with a rapid buildup of speed. His recovery was effected by leaving the cyclic control in the position it had been and pulling on collective pitch. The helicopter recovered from the dive and the pilot then made a slow descent.

4. We will forward any other pertinent information as we receive it. If you have any other questions or require further information on the above please advise us.

J. M. Young
for Regional Director, Air Services

ENCL

000122

Document disclosed under the *Access to Information Act*
Document divulgué en vertu de la *Loi sur l'accès à l'information*

5002-3796(CAIE)

No. 3 Temporary Bldg.,
Ottawa 4, Ontario,
December 20, 1968.

Mr. R.J. Templin,
National Research Council,
National Aeronautical Establishment,
Building M-2, Room 113,
Montreal Road,
Ottawa.

Dear Mr. Templin:

In connection with a continuing investigation into an accident to Hiller FH1100 Helicopter, CF-WMO, near Fort Langley, B.C., it is requested that flow visualization studies be done in the water tunnel. A model, approximately 12 inches by 8 inches at a horizontal scale of 1 inch = 1,000 feet and a vertical scale of 1 inch = 500 feet of the locality terrain has been provided. It would be appreciated if a brief report could be rendered on the following borad lines:

> Photographs on a time lapse basis which would show the flow from about 100 feet above ground level to a point where the streamlines are undisturbed at intervals of 200 feet below the above determined height until 400 feet and from then on down at 100 feet intervals. It would also be useful if a flat plate could be substituted from the model in order to assess the effects of the ramps leading to the model.

A copy showing the location of where the wreckage came to rest and also the estimated point where the original breakup occurred is attached. Our Laboratory Report 24/68 is provided to permit general appraisal of the situation.

The breakup analysis determined that the main rotor was the first item to fail and any comment which your observations might produce which would permit assessment of the ground turbulence effects to be considered as either a potential cause of the accident or which might eliminate this possibility, would also be appreciated.

Yours truly,

(A.N. Le Cheminant)
for Chief, Accident Investigation Division.

Attachment

ANL/MD

Document disclosed under the Access to Information Act
Document divulgué en vertu de la Loi sur l'accès à l'information



000124

Document disclosed under the *Access to Information Act*
Document divulgué en vertu de la *Loi sur l'accès à l'information*

5002-3796(CAIE)

No. 3 Temporary Building,
Ottawa 4, Ontario, Canada,
December 20, 1968.

Federal Aviation Administration,
Eastern Region,
John F. Kennedy International Airport,
Federal Building,
Jamaica, New York, 11430.

Dear Sirs:

Re: Accident, Hiller FH1100, CF-WMO,
Approximately 5 Miles East of
Fort Langley, B.C., March 14, 1968

We understand that, as a result of the above accident, the Fairchild Hiller Corporation carried out a concentrated analytical and flight test program to determine if a combination of environmental disturbance, overspeed and control technique could cause a safety of flight situation. Pending results of this program, the operators were advised to observe an airspeed limitation of 110 mph. at all times, and to avoid abrupt control movements when flying in turbulence.

Since the temporary speed restriction has been lifted, we assume that this program has been done. Two months ago we requested the Fairchild Hiller Corporation to send us the results of the program which was undertaken. They replied that this information was available from your office.

Could you please send us the results of the program which was undertaken. Please include all the available data on the effects of the extended stabilizer.

Yours truly,

Original Signed by
A. J. W. MELSON

(A.J.W. Melson)
for Chief, Accident Investigation Division.

AJWM:MD

Document disclosed under the Access to Information Act
Document divulgué en vertu de la Loi sur l'accès à l'information

VENDOR'S ACCEPTANCE COPY

DEPARTMENT OF TRANSPORT
OFFICE OF CHIEF, PURCHASES AND CONTRACTS

PURCHASE ORDER

OTTAWA, ONT.

DATE MAILED NOV 12 1968

DATE NOV 5/68

SHAW PHOTOGRAMMETRIC SERVICES LIMITED
285X RICHMOND ROAD
OTTAWA 3, ONTARIO.

PLEASE INDICATE THE FOLLOWING ON ALL PACKAGES, INVOICES, CORRESPONDENCE, ETC.

ORDER NO. H 3034
FILE NO. 5002-3796
REQ NO. H 15 CAIE

PLEASE FURNISH THE FOLLOWING MATERIALS, AND/OR SERVICES IN ACCORDANCE WITH THE CONDITIONS STATED BELOW, AND ON THE REVERSE SIDE.

RESP. NO	ACTIVITY	WARRANT	ENCUMBRANCE	LINE OBJ. (RES.)
416115			4006	5241

ITEM NO.	QUANTITY	DESCRIPTION	D.O.T. STOCK NO.	UNIT PRICE
	1	TERRAIN RELIEF MODEL ABOUT 8" X 12" AREA OUTLINED ON AIR MAP 92G1C TO A SCALE 1200 FT. TO 1 INCH SHOWING CONTOURS OF 10 FT SEPARATION AS ON THE MAP WHONOCK B.C. VERTICAL EXAGGERATION OF 1 TO 2: MODEL TO BE TOUCHED UP FROM AERIAL AND OTHER PHOTOS TO CONFORM AS CLOSE TO NATURAL CONDITIONS AS POSSIBLE AND TO BE WATER PROOFED FOR USE IN WATER TUNNEL.		$ 425.00
		ALREADY RECEIVED - PLEASE DO NOT DUPLICATE		
		REF: YOUR QUOTE DATED JUNE 25 AND LETTER DATED OCT 18.		
		Fed. Sales tax		51.00
				476.00

PG/SS

DUTY IF ANY - INCLUDED ☐ EXTRA ☐ N/A
(FEDERAL TAXES INCLUDED SUBJECT TO ADJUSTMENT - SEE "SPECIAL NOTE TAXES" IN TENDER.)
FEDERAL SALES TAX - INCLUDED ☐ EXTRA ☒ NOT APPLICABLE ☐
TERMS - _____ % DISCOUNT FOR PAYMENT WITHIN _____ DAYS FROM DELIVERY OF GOODS AT DESTINATION OR RECEIPT OF INVOICES, WHICHEVER IS THE LATER DATE. NET

INVOICES TO BE ITEMIZED IN THE SAME ORDER AS ABOVE. ORIGINAL AND THREE COPIES SENT DIRECT TO:
C.A.I.E. NO. 3 TEMP. BUILDING
OTTAWA 4, ONTARIO
FIFTH COPY TO BE MAILED TO CHIEF, PURCHASES AND CONTRACTS, OTTAWA.

CONSIGN TO: DEPARTMENT OF TRANSPORT
ACCIDENT INVESTIGATION, C.A.I.E. ENGINEERING LAB
BUILDING U.62, UPLANDS, ONTARIO

SHIPMENT WILL BE MADE FROM _____ IN _____ DAYS FROM RECEIPT OF THIS ORDER
F.O.B. DELIVERED IN ACCORDANCE WITH YOUR TENDER DATED _____

CERTIFIED IN ACCORDANCE WITH SECTION 30 OF THE FINANCIAL ADMINISTRATION ACT. C. 12, 1951

FOR COMPTROLLER OF THE TREASURY

D Grace
FOR CHIEF, PURCHASES AND CONTRACTS

H 3034
ORDER NO.

VENDOR TO SIGN AND RETURN IMMEDIATELY ONE COPY OF THIS ORDER TO DEPARTMENT OF TRANSPORT, OTTAWA.

THIS ORDER IS SUBJECT TO THE TERMS AND CONDITIONS HEREIN AND WE WILL SHIP AS SPECIFIED.

Delivered
DEFINITE SHIPPING DATES

SHAW PHOTOGRAMMETRIC SERVICES LIMITED
per R.P. Shaw
SIGNATURE OF VENDOR R.P. Shaw

13 Nov. 68
DATE

DISTRIBUTION

07-000 11-67 REVISED

VENDOR ☐ VENDOR ☒ PURCHASING ☐ CONSIGNEE STORES ☐ CONSIGNEE ACCOUNTANT ☐ STORES ☐ TREASURY ☐ E

Document disclosed under the *Access to Information Act*
Document divulgué en vertu de la *Loi sur l'accès à l'information*

LIQUIDATIONS

DATE	REF. No.	AMOUNT	BALANCE	DATE	REF. No.	AMOUNT	BALANCE

TERMS AND CONDITIONS

DELIVERIES - THE DEPARTMENT'S CONSTRUCTION AND MAINTENANCE SCHEDULES ARE BASED UPON THE AGREEMENT THAT MATERIALS AND SERVICES WILL BE PROVIDED ON THE DATES SPECIFIED HEREIN. IF SHIPMENTS ARE NOT MADE OR SERVICES PROVIDED AT THE TIME AGREED UPON, THE DEPARTMENT MAY CANCEL OR PURCHASE ELSEWHERE, AND HOLD THE VENDOR ACCOUNTABLE THEREFOR.

PRICES - THIS ORDER MUST NOT BE FILLED AT PRICES HIGHER THAN THOSE APPEARING HEREON OR IF NO PRICES APPEAR, THEN AT FAIR COMPETITIVE PRICES, WITHOUT AUTHORITY IN WRITING FROM THE DEPARTMENT.

PACKING AND CRATING CHARGES - NO CHARGE WILL BE ALLOWED FOR PACKING, CRATING, DRAYAGE OR STORAGE UNLESS OTHERWISE PROVIDED, HEREIN.

FREIGHT AND EXPRESS CHARGES - SUCH CHARGES MUST BE PREPAID ON ALL SHIPMENTS UNLESS OTHERWISE INSTRUCTED, AND IN CASES WHERE VENDORS ARE ENTITLED TO REIMBURSEMENT, AMOUNT SHOULD BE ENTERED ON INVOICE AND RECEIPTED BILL ATTACHED.

WARRANTY AND INSPECTION - THE VENDOR WARRANTS ALL MATERIALS DELIVERED AND WORKS CONSTRUCTED OR REPAIRED HEREUNDER TO BE FREE FROM DEFECTS OF MATERIAL OR WORKMANSHIP AND TO CONFORM STRICTLY TO THE SPECIFICATIONS, DRAWINGS, OR SAMPLE, SPECIFIED OR FURNISHED BY THE DEPARTMENT. THIS WARRANTY SHALL SURVIVE ANY INSPECTION, DELIVERY, ACCEPTANCE OR PAYMENTS BY THE DEPARTMENT, OF OR FOR THE MATERIALS OR WORK. ALL MATERIALS FURNISHED AND WORKS CONSTRUCTED OR REPAIRED WILL BE SUBJECT TO INSPECTION AND APPROVAL BEFORE ACCEPTANCE BY THE DEPARTMENT AFTER DELIVERY. THE DEPARTMENT RESERVES THE RIGHT TO REJECT AND RETURN AT THE RISK AND EXPENSE OF THE VENDOR, SUCH PORTION OF ANY SHIPMENT WHICH MAY BE DEFECTIVE OR FAIL TO COMPLY WITH SPECIFICATIONS, WITHOUT INVALIDATING THE REMAINDER OF THIS ORDER. MATERIAL RETURNED TO THE VENDOR BY THE DEPARTMENT FOR REPLACEMENT OR CREDIT, WILL BE CHARGED AGAINST THE VENDOR'S ACCOUNT.

SHIPPING - MATERIALS MUST BE PLAINLY MARKED IN ACCORDANCE WITH INSTRUCTIONS ON THE FACE OF THIS ORDER, ALSO WITH THE NAME OF CONSIGNOR AND CONSIGNEE. A COPY OF RAILWAY, EXPRESS COMPANY OR OTHER CARRIER'S SHIPPING BILL, AS WELL AS PACKING LIST, MUST ACCOMPANY EACH SHIPMENT TO DESTINATION.

TITLE TO DRAWING, SPECIFICATIONS AND PATTERNS - THE DEPARTMENT SHALL AT ALL TIMES HAVE TITLE TO ALL DRAWINGS, SPECIFICATIONS, PATTERNS AND DIES FURNISHED TO THE VENDOR OR PAID FOR BY THE DEPARTMENT FOR USE WITH THIS ORDER. THE VENDOR AT ANY TIME SHALL UPON INSTRUCTIONS FROM THE DEPARTMENT RETURN ALL SUCH DRAWINGS, SPECIFICATIONS, PATTERNS OR DIES TO THE DEPARTMENT, WITHOUT ADDITIONAL COST.

TAXES - EXCEPT AS MAY BE OTHERWISE PROVIDED IN THIS ORDER, THE PRICE INCLUDES ALL APPLICABLE FEDERAL TAXES IN EFFECT ON THE DATE OF SHIPMENT.

QUANTITY - THE QUANTITY OF MATERIALS OR SERVICES SPECIFIED ON THIS ORDER MUST NOT BE EXCEEDED WITHOUT FIRST OBTAINING WRITTEN CONSENT OF THE DEPARTMENT. THE DEPARTMENT WILL NOT BE RESPONSIBLE FOR ANY GOODS OR SERVICES DELIVERED, UNLESS ORDERED REGULARLY THROUGH THE CHIEF, PURCHASES & CONTRACTS.

CANCELLATION - THE DEPARTMENT MAY CANCEL ANY PORTION OF THIS ORDER NOT FILLED AS SPECIFIED.

SUPPLEMENTARY INFORMATION - ALL SPECIFICATIONS, DRAWINGS, NOTES, INSTRUCTIONS OR TECHNICAL INFORMATION REFERRED TO IN THIS ORDER, SHALL BE DEEMED TO BE INCORPORATED HEREIN BY REFERENCE AS IF FULLY SET FORTH. ANY DISCREPANCIES OR QUESTIONS SHALL BE REFERRED TO THE CHIEF, PURCHASES & CONTRACTS FOR DECISION OR INTERPRETATION.

CONTRACT - NO AGREEMENT OR OTHER UNDERSTANDING IN ANY WAY MODIFYING THE CONDITIONS OF THE CONTRACT RESULTING FROM THE ACCEPTANCE OF THIS ORDER, WILL BE BINDING UPON THE DEPARTMENT, UNLESS MADE IN WRITING AND SIGNED BY AN AUTHORIZED REPRESENTATIVE OF THE DEPARTMENT.

SPECIAL - ANY TERM OR CONDITION, CONTAINED IN ANY FORM USED BY THE VENDOR TO SUBMIT A QUOTATION OR TO ACKNOWLEDGE THIS ORDER, WHICH WOULD OTHERWISE MODIFY, CONFLICT WITH, OR CONTRADICT ANY TERM OR CONDITION STIPULATED IN THIS ORDER, IS NOT EFFECTIVE UNLESS ACCEPTED IN WRITING BY AN AUTHORIZED REPRESENTATIVE OF THE DEPARTMENT.

Document disclosed under the *Access to Information Act*
Document divulgué en vertu de la *Loi sur l'accès à l'information*

SHAW PHOTOGRAMMETRIC SERVICES
LIMITED
CUSTOM MAP MAKERS
285A Richmond Road
OTTAWA 3, ONT.
TEL. 729-7508

13 Nov. 1968.

SOLD TO Department of Transport,
OTTAWA, Canada.

INVOICE NO. 67-68

SPS Contr. No. 67-68

Your P.O. No. H 3034

File No. 5002-3796
Req. No. H-15 CAIR

Terms Net 30 Days

1968 Oct. 15	To production and delivery of a terrain model	$425.00	
	Federal Sales Tax	51.00	
	Total amount of this invoice.....		$476.00

AFTER ~~15~~ 23rd NOV. 1968
OUR NEW ADDRESS WILL BE
30 THORNCLIFF PLACE
OTTAWA 6, ONT.
TEL. (613) 829-3801

000128

Document disclosed under the Access to Information Act
Document divulgué en vertu de la Loi sur l'accès à l'information

DEPARTMENT OF TRANSPORT
OFFICE OF CHIEF, PURCHASES AND CONTRACTS

PURCHASE ORDER

OTTAWA, ONT.

DATE NOV 5/68

SHAW PHOTOGRAMMETRIC SERVICES LIMITED
285A RICHMOND ROAD
OTTAWA 3, ONTARIO

PLEASE INDICATE THE FOLLOWING ON ALL PACKAGES, INVOICES, CORRESPONDENCE, ETC.

ORDER NO. H 3034
FILE NO. 5002-3796
REQ. NO. H 15 CAIE

PLEASE FURNISH THE FOLLOWING MATERIALS, AND/OR SERVICES IN ACCORDANCE WITH THE CONDITIONS STATED BELOW, AND ON THE REVERSE SIDE.

RESP. NO	ACTIVITY	WARRANT	ENCUMBRANCE	LINE OBJ. (RES.)
416115			4006	5241

ITEM NO.	QUANTITY	DESCRIPTION	D.O.T. STOCK NO.	UNIT PRICE
	1	TERRAIN RELIEF MODEL ABOUT 8" X 12" AREA OUTLINED ON AIR MAP 92G1C TO A SCALE 1200 FT. TO 1 INCH SHOWING CONTOURS OF 10 FT SEPARATION AS ON THE MAP WHONOCK B.C. VERTICAL EXAGGERATION OF 1 TO 2: MODEL TO BE TOUCHED UP FROM AERIAL AND OTHER PHOTOS TO CONFORM AS CLOSE TO NATURAL CONDITIONS AS POSSIBLE AND TO BE WATER PROOFED FOR USE IN WATER TUNNEL.		$ 425.00
		ALREADY RECEIVED - PLEASE DO NOT DUPLICATE		
		REF: YOUR QUOTE DATED JUNE 25 AND LETTER DATED OCT 18.		

PG/SS

476.00

DUTY IF ANY - INCLUDED ☐ EXTRA ☐ N/A
(FEDERAL TAXES INCLUDED SUBJECT TO ADJUSTMENT - SEE "SPECIAL NOTE TAXES" IN TENDER.)
FEDERAL SALES TAX - INCLUDED ☐ EXTRA ☒ NOT APPLICABLE ☐
TERMS - _____ % DISCOUNT FOR PAYMENT WITHIN _____ DAYS FROM DELIVERY OF GOODS AT DESTINATION OR RECEIPT OF INVOICES, WHICHEVER IS THE LATER DATE. NET

INVOICES TO BE ITEMIZED IN THE SAME ORDER AS ABOVE. ORIGINAL AND THREE COPIES SENT DIRECT TO:
C.A.I.E. NO. 3 TEMP. BUILDING
OTTAWA 4, ONTARIO
FIFTH COPY TO BE MAILED TO CHIEF, PURCHASES AND CONTRACTS, OTTAWA.

CONSIGN TO: DEPARTMENT OF TRANSPORT
ACCIDENT INVESTIGATION, C.A.I.E. ENGINEERING LAB
BUILDING U.62, UPLANDS, ONTARIO

SHIPMENT WILL BE MADE FROM _____ IN _____ DAYS FROM RECEIPT OF THIS ORDER
F.O.B. DELIVERED IN ACCORDANCE WITH YOUR TENDER DATED _____

CERTIFIED IN ACCORDANCE WITH SECTION 30 OF THE FINANCIAL ADMINISTRATION ACT. C. 12, 1951

_____
FOR COMPTROLLER OF THE TREASURY

P Grace
FOR CHIEF, PURCHASES AND CONTRACTS

H 3034
ORDER NO.

VENDOR TO SIGN AND RETURN IMMEDIATELY ONE COPY OF THIS ORDER TO DEPARTMENT OF TRANSPORT, OTTAWA.

THIS ORDER IS SUBJECT TO THE TERMS AND CONDITIONS HEREIN AND WE WILL SHIP AS SPECIFIED.

DEFINITE SHIPPING DATES | SIGNATURE OF VENDOR | DATE

DISTRIBUTION

07-000 11-67 REVISED

VENDOR ☐ VENDOR ☐ PURCHASING ☐ CONSIGNEE STORES ☐ CONSIGNEE ACCOUNTANT ☐ STORES ☐ TREASURY ☐

DATE MAILED
NOV 12 196-

000129

Document disclosed under the *Access to Information Act*
Document divulgué en vertu de la *Loi sur l'accès à l'information*

LIQUIDATIONS

DATE	REF. No.	AMOUNT	BALANCE	DATE	REF. No.	AMOUNT	BALANCE

TERMS AND CONDITIONS

DELIVERIES - THE DEPARTMENT'S CONSTRUCTION AND MAINTENANCE SCHEDULES ARE BASED UPON THE AGREEMENT THAT MATERIALS AND SERVICES WILL BE PROVIDED ON THE DATES SPECIFIED HEREIN. IF SHIPMENTS ARE NOT MADE OR SERVICES PROVIDED AT THE TIME AGREED UPON, THE DEPARTMENT MAY CANCEL OR PURCHASE ELSEWHERE, AND HOLD THE VENDOR ACCOUNTABLE THEREFOR.

PRICES - THIS ORDER MUST NOT BE FILLED AT PRICES HIGHER THAN THOSE APPEARING HEREON OR IF NO PRICES APPEAR, THEN AT FAIR COMPETITIVE PRICES, WITHOUT AUTHORITY IN WRITING FROM THE DEPARTMENT.

PACKING AND CRATING CHARGES - NO CHARGE WILL BE ALLOWED FOR PACKING, CRATING, DRAYAGE OR STORAGE UNLESS OTHERWISE PROVIDED, HEREIN.

FREIGHT AND EXPRESS CHARGES - SUCH CHARGES MUST BE PREPAID ON ALL SHIPMENTS UNLESS OTHERWISE INSTRUCTED, AND IN CASES WHERE VENDORS ARE ENTITLED TO REIMBURSEMENT, AMOUNT SHOULD BE ENTERED ON INVOICE AND RECEIPTED BILL ATTACHED.

WARRANTY AND INSPECTION - THE VENDOR WARRANTS ALL MATERIALS DELIVERED AND WORKS CONSTRUCTED OR REPAIRED HEREUNDER TO BE FREE FROM DEFECTS OF MATERIAL OR WORKMANSHIP AND TO CONFORM STRICTLY TO THE SPECIFICATIONS, DRAWINGS, OR SAMPLE, SPECIFIED OR FURNISHED BY THE DEPARTMENT. THIS WARRANTY SHALL SURVIVE ANY INSPECTION, DELIVERY, ACCEPTANCE OR PAYMENTS BY THE DEPARTMENT, OF OR FOR THE MATERIALS OR WORK. ALL MATERIALS FURNISHED AND WORKS CONSTRUCTED OR REPAIRED WILL BE SUBJECT TO INSPECTION AND APPROVAL BEFORE ACCEPTANCE BY THE DEPARTMENT AFTER DELIVERY. THE DEPARTMENT RESERVES THE RIGHT TO REJECT AND RETURN AT THE RISK AND EXPENSE OF THE VENDOR, SUCH PORTION OF ANY SHIPMENT WHICH MAY BE DEFECTIVE OR FAIL TO COMPLY WITH SPECIFICATIONS, WITHOUT INVALIDATING THE REMAINDER OF THIS ORDER. MATERIAL RETURNED TO THE VENDOR BY THE DEPARTMENT FOR REPLACEMENT OR CREDIT, WILL BE CHARGED AGAINST THE VENDOR'S ACCOUNT.

SHIPPING - MATERIALS MUST BE PLAINLY MARKED IN ACCORDANCE WITH INSTRUCTIONS ON THE FACE OF THIS ORDER, ALSO WITH THE NAME OF CONSIGNOR AND CONSIGNEE. A COPY OF RAILWAY, EXPRESS COMPANY OR OTHER CARRIER'S SHIPPING BILL, AS WELL AS PACKING LIST, MUST ACCOMPANY EACH SHIPMENT TO DESTINATION.

TITLE TO DRAWING, SPECIFICATIONS AND PATTERNS - THE DEPARTMENT SHALL AT ALL TIMES HAVE TITLE TO ALL DRAWINGS, SPECIFICATIONS, PATTERNS AND DIES FURNISHED TO THE VENDOR OR PAID FOR BY THE DEPARTMENT FOR USE WITH THIS ORDER. THE VENDOR AT ANY TIME SHALL UPON INSTRUCTIONS FROM THE DEPARTMENT RETURN ALL SUCH DRAWINGS, SPECIFICATIONS, PATTERNS OR DIES TO THE DEPARTMENT, WITHOUT ADDITIONAL COST.

TAXES - EXCEPT AS MAY BE OTHERWISE PROVIDED IN THIS ORDER, THE PRICE INCLUDES ALL APPLICABLE FEDERAL TAXES IN EFFECT ON THE DATE OF SHIPMENT.

QUANTITY - THE QUANTITY OF MATERIALS OR SERVICES SPECIFIED ON THIS ORDER MUST NOT BE EXCEEDED WITHOUT FIRST OBTAINING WRITTEN CONSENT OF THE DEPARTMENT. THE DEPARTMENT WILL NOT BE RESPONSIBLE FOR ANY GOODS OR SERVICES DELIVERED, UNLESS ORDERED REGULARLY THROUGH THE CHIEF, PURCHASES & CONTRACTS.

CANCELLATION - THE DEPARTMENT MAY CANCEL ANY PORTION OF THIS ORDER NOT FILLED AS SPECIFIED.

SUPPLEMENTARY INFORMATION - ALL SPECIFICATIONS, DRAWINGS, NOTES, INSTRUCTIONS OR TECHNICAL INFORMATION REFERRED TO IN THIS ORDER, SHALL BE DEEMED TO BE INCORPORATED HEREIN BY REFERENCE AS IF FULLY SET FORTH. ANY DISCREPANCIES OR QUESTIONS SHALL BE REFERRED TO THE CHIEF, PURCHASES & CONTRACTS FOR DECISION OR INTERPRETATION.

CONTRACT - NO AGREEMENT OR OTHER UNDERSTANDING IN ANY WAY MODIFYING THE CONDITIONS OF THE CONTRACT RESULTING FROM THE ACCEPTANCE OF THIS ORDER, WILL BE BINDING UPON THE DEPARTMENT, UNLESS MADE IN WRITING AND SIGNED BY AN AUTHORIZED REPRESENTATIVE OF THE DEPARTMENT.

SPECIAL - ANY TERM OR CONDITION, CONTAINED IN ANY FORM USED BY THE VENDOR TO SUBMIT A QUOTATION OR TO ACKNOWLEDGE THIS ORDER, WHICH WOULD OTHERWISE MODIFY, CONFLICT WITH, OR CONTRADICT ANY TERM OR CONDITION STIPULATED IN THIS ORDER, IS NOT EFFECTIVE UNLESS ACCEPTED IN WRITING BY AN AUTHORIZED REPRESENTATIVE OF THE DEPARTMENT.

Document disclosed under the Access to Information Act
Document divulgué en vertu de la Loi sur l'accès à l'information

DEPARTMENT OF TRANSPORT
OFFICE OF CHIEF, PURCHASES AND CONTRACTS

PURCHASE ORDER

OTTAWA, ONT.

DATE NOV 5/68

PLEASE INDICATE THE FOLLOWING ON ALL PACKAGES, INVOICES, CORRESPONDENCE, ETC.

ORDER NO. H 3034
FILE NO. 5002-3796
REQ. NO. H 15 CAIE

SHAW PHOTOGRAMMETRIC SERVICES LIMITED
285A RICHMOND ROAD
OTTAWA 3, ONTARIO

PLEASE FURNISH THE FOLLOWING MATERIALS, AND/OR SERVICES IN ACCORDANCE WITH THE CONDITIONS STATED BELOW, AND ON THE REVERSE SIDE.

RESP. NO	ACTIVITY	WARRANT	ENCUMBRANCE	LINE OBJ. (RES.)
416115			4006	5241

ITEM NO.	QUANTITY	DESCRIPTION	D.O.T. STOCK NO.	UNIT PRICE
	1	TERRAIN RELIEF MODEL ABOUT 8" X 12" AREA OUTLINED ON AIR MAP 92G1C TO A SCALE 1200 FT. TO 1 INCH SHOWING CONTOURS OF 10 FT SEPARATION AS ON THE MAP WHONOCK B.C. VERTICAL EXAGGERATION OF 1 TO 2: MODEL TO BE TOUCHED UP FROM AERIAL AND OTHER PHOTOS TO CONFORM AS CLOSE TO NATURAL CONDITIONS AS POSSIBLE AND TO BE WATER PROOFED FOR USE IN WATER TUNNEL.		$ 425.00
		ALREADY RECEIVED - PLEASE DO NOT DUPLICATE		
		REF: YOUR QUOTE DATED JUNE 25 AND LETTER DATED OCT 18.		

PG/SS

476.00

DUTY IF ANY - INCLUDED ☐ EXTRA ☐ N/A
(FEDERAL TAXES INCLUDED SUBJECT TO ADJUSTMENT - SEE "SPECIAL NOTE TAXES" IN TENDER.)
FEDERAL SALES TAX - INCLUDED ☐ EXTRA ☒ NOT APPLICABLE ☐
TERMS - _____ % DISCOUNT FOR PAYMENT WITHIN _____ DAYS FROM DELIVERY OF GOODS AT DESTINATION OR RECEIPT OF INVOICES, WHICHEVER IS THE LATER DATE. NET

INVOICES TO BE ITEMIZED IN THE SAME ORDER AS ABOVE. ORIGINAL AND THREE COPIES SENT DIRECT TO:
C.A.I.E. NO. 3 TEMP. BUILDING
OTTAWA 4, ONTARIO
FIFTH COPY TO BE MAILED TO CHIEF, PURCHASES AND CONTRACTS, OTTAWA.

CONSIGN TO: DEPARTMENT OF TRANSPORT
ACCIDENT INVESTIGATION, C.A.I.E. ENGINEERING LAB BUILDING U.62, UPLANDS, ONTARIO

SHIPMENT WILL BE MADE FROM _____ IN _____ DAYS FROM RECEIPT OF THIS ORDER
F.O.B. DELIVERED IN ACCORDANCE WITH YOUR TENDER DATED _____

CERTIFIED IN ACCORDANCE WITH SECTION 30 OF THE FINANCIAL ADMINISTRATION ACT. C. 12, 1951

_____ FOR COMPTROLLER OF THE TREASURY

P. Grace FOR CHIEF, PURCHASES AND CONTRACTS

H 3034 ORDER NO.

VENDOR TO SIGN AND RETURN IMMEDIATELY ONE COPY OF THIS ORDER TO DEPARTMENT OF TRANSPORT, OTTAWA.

THIS ORDER IS SUBJECT TO THE TERMS AND CONDITIONS HEREIN AND WE WILL SHIP AS SPECIFIED.

_____ DEFINITE SHIPPING DATES

_____ SIGNATURE OF VENDOR

_____ DATE

DISTRIBUTION

07-000 11-67 REVISED VENDOR ☐ VENDOR ☐ PURCHASING ☐ CONSIGNEE STORES ☐ CONSIGNEE ACCOUNTANT ☐ STORES ☐ TREASURY ☐ E 000131

Document disclosed under the *Access to Information Act*
Document divulgué en vertu de la *Loi sur l'accès à l'information*

LIQUIDATIONS

DATE	REF. No.	AMOUNT	BALANCE	DATE	REF. No.	AMOUNT	BALANCE

TERMS AND CONDITIONS

DELIVERIES - THE DEPARTMENT'S CONSTRUCTION AND MAINTENANCE SCHEDULES ARE BASED UPON THE AGREEMENT THAT MATERIALS AND SERVICES WILL BE PROVIDED ON THE DATES SPECIFIED HEREIN. IF SHIPMENTS ARE NOT MADE OR SERVICES PROVIDED AT THE TIME AGREED UPON, THE DEPARTMENT MAY CANCEL OR PURCHASE ELSEWHERE, AND HOLD THE VENDOR ACCOUNTABLE THEREFOR.

PRICES - THIS ORDER MUST NOT BE FILLED AT PRICES HIGHER THAN THOSE APPEARING HEREON OR IF NO PRICES APPEAR, THEN AT FAIR COMPETITIVE PRICES, WITHOUT AUTHORITY IN WRITING FROM THE DEPARTMENT.

PACKING AND CRATING CHARGES - NO CHARGE WILL BE ALLOWED FOR PACKING, CRATING, DRAYAGE OR STORAGE UNLESS OTHERWISE PROVIDED, HEREIN.

FREIGHT AND EXPRESS CHARGES - SUCH CHARGES MUST BE PREPAID ON ALL SHIPMENTS UNLESS OTHERWISE INSTRUCTED, AND IN CASES WHERE VENDORS ARE ENTITLED TO REIMBURSEMENT, AMOUNT SHOULD BE ENTERED ON INVOICE AND RECEIPTED BILL ATTACHED.

WARRANTY AND INSPECTION - THE VENDOR WARRANTS ALL MATERIALS DELIVERED AND WORKS CONSTRUCTED OR REPAIRED HEREUNDER TO BE FREE FROM DEFECTS OF MATERIAL OR WORKMANSHIP AND TO CONFORM STRICTLY TO THE SPECIFICATIONS, DRAWINGS, OR SAMPLE, SPECIFIED OR FURNISHED BY THE DEPARTMENT. THIS WARRANTY SHALL SURVIVE ANY INSPECTION, DELIVERY, ACCEPTANCE OR PAYMENTS BY THE DEPARTMENT, OF OR FOR THE MATERIALS OR WORK. ALL MATERIALS FURNISHED AND WORKS CONSTRUCTED OR REPAIRED WILL BE SUBJECT TO INSPECTION AND APPROVAL BEFORE ACCEPTANCE BY THE DEPARTMENT AFTER DELIVERY. THE DEPARTMENT RESERVES THE RIGHT TO REJECT AND RETURN AT THE RISK AND EXPENSE OF THE VENDOR, SUCH PORTION OF ANY SHIPMENT WHICH MAY BE DEFECTIVE OR FAIL TO COMPLY WITH SPECIFICATIONS, WITHOUT INVALIDATING THE REMAINDER OF THIS ORDER. MATERIAL RETURNED TO THE VENDOR BY THE DEPARTMENT FOR REPLACEMENT OR CREDIT, WILL BE CHARGED AGAINST THE VENDOR'S ACCOUNT.

SHIPPING - MATERIALS MUST BE PLAINLY MARKED IN ACCORDANCE WITH INSTRUCTIONS ON THE FACE OF THIS ORDER, ALSO WITH THE NAME OF CONSIGNOR AND CONSIGNEE. A COPY OF RAILWAY, EXPRESS COMPANY OR OTHER CARRIER'S SHIPPING BILL, AS WELL AS PACKING LIST, MUST ACCOMPANY EACH SHIPMENT TO DESTINATION.

TITLE TO DRAWING, SPECIFICATIONS AND PATTERNS - THE DEPARTMENT SHALL AT ALL TIMES HAVE TITLE TO ALL DRAWINGS, SPECIFICATIONS, PATTERNS AND DIES FURNISHED TO THE VENDOR OR PAID FOR BY THE DEPARTMENT FOR USE WITH THIS ORDER. THE VENDOR AT ANY TIME SHALL UPON INSTRUCTIONS FROM THE DEPARTMENT RETURN ALL SUCH DRAWINGS, SPECIFICATIONS, PATTERNS OR DIES TO THE DEPARTMENT, WITHOUT ADDITIONAL COST.

TAXES - EXCEPT AS MAY BE OTHERWISE PROVIDED IN THIS ORDER, THE PRICE INCLUDES ALL APPLICABLE FEDERAL TAXES IN EFFECT ON THE DATE OF SHIPMENT.

QUANTITY - THE QUANTITY OF MATERIALS OR SERVICES SPECIFIED ON THIS ORDER MUST NOT BE EXCEEDED WITHOUT FIRST OBTAINING WRITTEN CONSENT OF THE DEPARTMENT. THE DEPARTMENT WILL NOT BE RESPONSIBLE FOR ANY GOODS OR SERVICES DELIVERED, UNLESS ORDERED REGULARLY THROUGH THE CHIEF, PURCHASES & CONTRACTS.

CANCELLATION - THE DEPARTMENT MAY CANCEL ANY PORTION OF THIS ORDER NOT FILLED AS SPECIFIED.

SUPPLEMENTARY INFORMATION - ALL SPECIFICATIONS, DRAWINGS, NOTES, INSTRUCTIONS OR TECHNICAL INFORMATION REFERRED TO IN THIS ORDER, SHALL BE DEEMED TO BE INCORPORATED HEREIN BY REFERENCE AS IF FULLY SET FORTH. ANY DISCREPANCIES OR QUESTIONS SHALL BE REFERRED TO THE CHIEF, PURCHASES & CONTRACTS FOR DECISION OR INTERPRETATION.

CONTRACT - NO AGREEMENT OR OTHER UNDERSTANDING IN ANY WAY MODIFYING THE CONDITIONS OF THE CONTRACT RESULTING FROM THE ACCEPTANCE OF THIS ORDER, WILL BE BINDING UPON THE DEPARTMENT, UNLESS MADE IN WRITING AND SIGNED BY AN AUTHORIZED REPRESENTATIVE OF THE DEPARTMENT.

SPECIAL - ANY TERM OR CONDITION, CONTAINED IN ANY FORM USED BY THE VENDOR TO SUBMIT A QUOTATION OR TO ACKNOWLEDGE THIS ORDER, WHICH WOULD OTHERWISE MODIFY, CONFLICT WITH, OR CONTRADICT ANY TERM OR CONDITION STIPULATED IN THIS ORDER, IS NOT EFFECTIVE UNLESS ACCEPTED IN WRITING BY AN AUTHORIZED REPRESENTATIVE OF THE DEPARTMENT.

Document disclosed under the Access to Information Act
Document divulgué en vertu de la Loi sur l'accès à l'information

DEPARTMENT OF TRANSPORT
OFFICE OF CHIEF, PURCHASES AND CONTRACTS

PURCHASE ORDER

OTTAWA, ONT.

DATE NOV 5/68

PLEASE INDICATE THE FOLLOWING ON ALL PACKAGES, INVOICES, CORRESPONDENCE, ETC.

ORDER NO. H 3034
FILE NO. 5002-3796
REQ. NO. H 15 CAIE

SHAW PHOTOGRAMMETRIC SERVICES LIMITED
285A RICHMOND ROAD
OTTAWA 3, ONTARIO

PLEASE FURNISH THE FOLLOWING MATERIALS, AND/OR SERVICES IN ACCORDANCE WITH THE CONDITIONS STATED BELOW, AND ON THE REVERSE SIDE.

RESP. NO	ACTIVITY	WARRANT	ENCUMBRANCE	LINE OBJ. (RES.)
416115			4006	5241

ITEM NO.	QUANTITY	DESCRIPTION	D.O.T. STOCK NO.	UNIT PRICE
	1	TERRAIN RELIEF MODEL ABOUT 8" X 12" AREA OUTLINED ON AIR MAP 92G1C TO A SCALE 1200 FT. TO 1 INCH SHOWING CONTOURS OF 10 FT SEPARATION AS ON THE MAP WHONOCK B.C. VERTICAL EXAGGERATION OF 1 TO 2: MODEL TO BE TOUCHED UP FROM AERIAL AND OTHER PHOTOS TO CONFORM AS CLOSE TO NATURAL CONDITIONS AS POSSIBLE AND TO BE WATER PROOFED FOR USE IN WATER TUNNEL.		$ 425.00
		ALREADY RECEIVED - PLEASE DO NOT DUPLICATE		
		REF: YOUR QUOTE DATED JUNE 25/1 AND LETTER DATED OCT 18.		

PG/SS

476.00

DUTY IF ANY - INCLUDED ☐ EXTRA ☐ N/A
(FEDERAL TAXES INCLUDED SUBJECT TO ADJUSTMENT – SEE "SPECIAL NOTE TAXES" IN TENDER.)
FEDERAL SALES TAX - INCLUDED ☐ EXTRA ☒ NOT APPLICABLE ☐
TERMS - _____ % DISCOUNT FOR PAYMENT WITHIN _____ DAYS FROM DELIVERY OF GOODS AT DESTINATION OR RECEIPT OF INVOICES, WHICHEVER IS THE LATER DATE. NET

INVOICES TO BE ITEMIZED IN THE SAME ORDER AS ABOVE. ORIGINAL AND THREE COPIES SENT DIRECT TO:
C.A.I.E. NO. 3 TEMP. BUILDING
OTTAWA 4, ONTARIO
FIFTH COPY TO BE MAILED TO CHIEF, PURCHASES AND CONTRACTS, OTTAWA.

CONSIGN TO: DEPARTMENT OF TRANSPORT
ACCIDENT INVESTIGATION, C.A.I.E. ENGINEERING LAB
BUILDING U.62, UPLANDS, ONTARIO

SHIPMENT WILL BE MADE FROM _____ IN _____ DAYS FROM RECEIPT OF THIS ORDER
F.O.B. DELIVERED IN ACCORDANCE WITH YOUR TENDER DATED _____

CERTIFIED IN ACCORDANCE WITH SECTION 30 OF THE FINANCIAL ADMINISTRATION ACT. C. 12, 1951

FOR COMPTROLLER OF THE TREASURY

P Grace
FOR CHIEF, PURCHASES AND CONTRACTS

H 3034
ORDER NO.

VENDOR TO SIGN AND RETURN IMMEDIATELY ONE COPY OF THIS ORDER TO DEPARTMENT OF TRANSPORT, OTTAWA.

THIS ORDER IS SUBJECT TO THE TERMS AND CONDITIONS HEREIN AND WE WILL SHIP AS SPECIFIED.

DEFINITE SHIPPING DATES

SIGNATURE OF VENDOR

DATE

DISTRIBUTION

07-000 11-67 REVISED
VENDOR ☐ VENDOR ☐ PURCHASING ☐ CONSIGNEE STORES ☐ CONSIGNEE ACCOUNTANT ☐ STORES ☐ TREASURY ☐ E.

Document disclosed under the *Access to Information Act*
Document divulgué en vertu de la *Loi sur l'accès à l'information*

LIQUIDATIONS

DATE	REF. No.	AMOUNT	BALANCE	DATE	REF. No.	AMOUNT	BALANCE

TERMS AND CONDITIONS

DELIVERIES - THE DEPARTMENT'S CONSTRUCTION AND MAINTENANCE SCHEDULES ARE BASED UPON THE AGREEMENT THAT MATERIALS AND SERVICES WILL BE PROVIDED ON THE DATES SPECIFIED HEREIN. IF SHIPMENTS ARE NOT MADE OR SERVICES PROVIDED AT THE TIME AGREED UPON, THE DEPARTMENT MAY CANCEL OR PURCHASE ELSEWHERE, AND HOLD THE VENDOR ACCOUNTABLE THEREFOR.

PRICES - THIS ORDER MUST NOT BE FILLED AT PRICES HIGHER THAN THOSE APPEARING HEREON OR IF NO PRICES APPEAR, THEN AT FAIR COMPETITIVE PRICES, WITHOUT AUTHORITY IN WRITING FROM THE DEPARTMENT.

PACKING AND CRATING CHARGES - NO CHARGE WILL BE ALLOWED FOR PACKING, CRATING, DRAYAGE OR STORAGE UNLESS OTHERWISE PROVIDED, HEREIN.

FREIGHT AND EXPRESS CHARGES - SUCH CHARGES MUST BE PREPAID ON ALL SHIPMENTS UNLESS OTHERWISE INSTRUCTED, AND IN CASES WHERE VENDORS ARE ENTITLED TO REIMBURSEMENT, AMOUNT SHOULD BE ENTERED ON INVOICE AND RECEIPTED BILL ATTACHED.

WARRANTY AND INSPECTION - THE VENDOR WARRANTS ALL MATERIALS DELIVERED AND WORKS CONSTRUCTED OR REPAIRED HEREUNDER TO BE FREE FROM DEFECTS OF MATERIAL OR WORKMANSHIP AND TO CONFORM STRICTLY TO THE SPECIFICATIONS, DRAWINGS, OR SAMPLE, SPECIFIED OR FURNISHED BY THE DEPARTMENT. THIS WARRANTY SHALL SURVIVE ANY INSPECTION, DELIVERY, ACCEPTANCE OR PAYMENTS BY THE DEPARTMENT, OF OR FOR THE MATERIALS OR WORK. ALL MATERIALS FURNISHED AND WORKS CONSTRUCTED OR REPAIRED WILL BE SUBJECT TO INSPECTION AND APPROVAL BEFORE ACCEPTANCE BY THE DEPARTMENT AFTER DELIVERY. THE DEPARTMENT RESERVES THE RIGHT TO REJECT AND RETURN AT THE RISK AND EXPENSE OF THE VENDOR, SUCH PORTION OF ANY SHIPMENT WHICH MAY BE DEFECTIVE OR FAIL TO COMPLY WITH SPECIFICATIONS, WITHOUT INVALIDATING THE REMAINDER OF THIS ORDER. MATERIAL RETURNED TO THE VENDOR BY THE DEPARTMENT FOR REPLACEMENT OR CREDIT, WILL BE CHARGED AGAINST THE VENDOR'S ACCOUNT.

SHIPPING - MATERIALS MUST BE PLAINLY MARKED IN ACCORDANCE WITH INSTRUCTIONS ON THE FACE OF THIS ORDER, ALSO WITH THE NAME OF CONSIGNOR AND CONSIGNEE. A COPY OF RAILWAY, EXPRESS COMPANY OR OTHER CARRIER'S SHIPPING BILL, AS WELL AS PACKING LIST, MUST ACCOMPANY EACH SHIPMENT TO DESTINATION.

TITLE TO DRAWING, SPECIFICATIONS AND PATTERNS - THE DEPARTMENT SHALL AT ALL TIMES HAVE TITLE TO ALL DRAWINGS, SPECIFICATIONS, PATTERNS AND DIES FURNISHED TO THE VENDOR OR PAID FOR BY THE DEPARTMENT FOR USE WITH THIS ORDER. THE VENDOR AT ANY TIME SHALL UPON INSTRUCTIONS FROM THE DEPARTMENT RETURN ALL SUCH DRAWINGS, SPECIFICATIONS, PATTERNS OR DIES TO THE DEPARTMENT, WITHOUT ADDITIONAL COST.

TAXES - EXCEPT AS MAY BE OTHERWISE PROVIDED IN THIS ORDER, THE PRICE INCLUDES ALL APPLICABLE FEDERAL TAXES IN EFFECT ON THE DATE OF SHIPMENT.

QUANTITY - THE QUANTITY OF MATERIALS OR SERVICES SPECIFIED ON THIS ORDER MUST NOT BE EXCEEDED WITHOUT FIRST OBTAINING WRITTEN CONSENT OF THE DEPARTMENT. THE DEPARTMENT WILL NOT BE RESPONSIBLE FOR ANY GOODS OR SERVICES DELIVERED, UNLESS ORDERED REGULARLY THROUGH THE CHIEF, PURCHASES & CONTRACTS.

CANCELLATION - THE DEPARTMENT MAY CANCEL ANY PORTION OF THIS ORDER NOT FILLED AS SPECIFIED.

SUPPLEMENTARY INFORMATION - ALL SPECIFICATIONS, DRAWINGS, NOTES, INSTRUCTIONS OR TECHNICAL INFORMATION REFERRED TO IN THIS ORDER, SHALL BE DEEMED TO BE INCORPORATED HEREIN BY REFERENCE AS IF FULLY SET FORTH. ANY DISCREPANCIES OR QUESTIONS SHALL BE REFERRED TO THE CHIEF, PURCHASES & CONTRACTS FOR DECISION OR INTERPRETATION.

CONTRACT - NO AGREEMENT OR OTHER UNDERSTANDING IN ANY WAY MODIFYING THE CONDITIONS OF THE CONTRACT RESULTING FROM THE ACCEPTANCE OF THIS ORDER, WILL BE BINDING UPON THE DEPARTMENT, UNLESS MADE IN WRITING AND SIGNED BY AN AUTHORIZED REPRESENTATIVE OF THE DEPARTMENT.

SPECIAL - ANY TERM OR CONDITION, CONTAINED IN ANY FORM USED BY THE VENDOR TO SUBMIT A QUOTATION OR TO ACKNOWLEDGE THIS ORDER, WHICH WOULD OTHERWISE MODIFY, CONFLICT WITH, OR CONTRADICT ANY TERM OR CONDITION STIPULATED IN THIS ORDER, IS NOT EFFECTIVE UNLESS ACCEPTED IN WRITING BY AN AUTHORIZED REPRESENTATIVE OF THE DEPARTMENT.

Document disclosed under the Access to Information Act
Document divulgué en vertu de la Loi sur l'accès à l'information

DEPARTMENT OF TRANSPORT
OFFICE OF CHIEF, PURCHASES AND CONTRACTS

PURCHASE ORDER

OTTAWA, ONT.

DATE NOV 5/68

PLEASE INDICATE THE FOLLOWING ON ALL PACKAGES, INVOICES, CORRESPONDENCE, ETC.

ORDER NO. H 3034
FILE NO. 5002-3796
REQ. NO. H 15 CAIE

SHAW PHOTOGRAMMETRIC SERVICES LIMITED
285A RICHMOND ROAD
OTTAWA 3, ONTARIO

PLEASE FURNISH THE FOLLOWING MATERIALS, AND/OR SERVICES IN ACCORDANCE WITH THE CONDITIONS STATED BELOW, AND ON THE REVERSE SIDE.

RESP. NO	ACTIVITY	WARRANT	ENCUMBRANCE	LINE OBJ. (RES.)
416115			4006	5241

ITEM NO.	QUANTITY	DESCRIPTION	D.O.T. STOCK NO.	UNIT PRICE
	1	TERRAIN RELIEF MODEL ABOUT 8" X 12" AREA OUTLINED ON AIR MAP 92G1C TO A SCALE 1200 FT. TO 1 INCH SHOWING CONTOURS OF 10 FT SEPARATION AS ON THE MAP WHONOCK B.C. VERTICAL EXAGGERATION OF 1 TO 2: MODEL TO BE TOUCHED UP FROM AERIAL AND OTHER PHOTOS TO CONFORM AS CLOSE TO NATURAL CONDITIONS AS POSSIBLE AND TO BE WATER PROOFED FOR USE IN WATER TUNNEL.		$ 425.00
		ALREADY RECEIVED - PLEASE DO NOT DUPLICATE		
		REF: YOUR QUOTE DATED JUNE 25 AND LETTER DATED OCT 18.		

PG/SS

476.00

DUTY IF ANY - INCLUDED ☐ EXTRA ☐ N/A
(FEDERAL TAXES INCLUDED SUBJECT TO ADJUSTMENT - SEE "SPECIAL NOTE TAXES" IN TENDER.)
FEDERAL SALES TAX - INCLUDED ☐ EXTRA ☒ NOT APPLICABLE ☐
TERMS - _____ % DISCOUNT FOR PAYMENT WITHIN _____ DAYS FROM DELIVERY OF GOODS AT DESTINATION OR RECEIPT OF INVOICES, WHICHEVER IS THE LATER DATE. NET

INVOICES TO BE ITEMIZED IN THE SAME ORDER AS ABOVE. ORIGINAL AND THREE COPIES SENT DIRECT TO:
C.A.I.E. NO. 3 TEMP. BUILDING
OTTAWA 4, ONTARIO
FIFTH COPY TO BE MAILED TO CHIEF, PURCHASES AND CONTRACTS, OTTAWA.

CONSIGN TO: DEPARTMENT OF TRANSPORT
ACCIDENT INVESTIGATION, C.A.I.E. ENGINEERING LAB
BUILDING U.62, UPLANDS, ONTARIO

SHIPMENT WILL BE MADE FROM _____ IN _____ DAYS FROM RECEIPT OF THIS ORDER
F.O.B. DELIVERED IN ACCORDANCE WITH YOUR TENDER DATED _____

CERTIFIED IN ACCORDANCE WITH SECTION 30 OF THE FINANCIAL ADMINISTRATION ACT. C. 12, 1951

FOR COMPTROLLER OF THE TREASURY

P Grace
FOR CHIEF, PURCHASES AND CONTRACTS

H 3034
ORDER NO.

VENDOR TO SIGN AND RETURN IMMEDIATELY ONE COPY OF THIS ORDER TO DEPARTMENT OF TRANSPORT, OTTAWA.

THIS ORDER IS SUBJECT TO THE TERMS AND CONDITIONS HEREIN AND WE WILL SHIP AS SPECIFIED.

DEFINITE SHIPPING DATES | SIGNATURE OF VENDOR | DATE

DISTRIBUTION

07-000 1 11-67 REVISED
VENDOR ☐ VENDOR ☐ PURCHASING ☐ CONSIGNEE STORES ☐ CONSIGNEE ACCOUNTANT ☐ STORES ☐ TREASURY ☐ EX

Document disclosed under the *Access to Information Act*
Document divulgué en vertu de la *Loi sur l'accès à l'information*

LIQUIDATIONS

DATE	REF. No.	AMOUNT	BALANCE	DATE	REF. No.	AMOUNT	BALANCE

TERMS AND CONDITIONS

DELIVERIES - THE DEPARTMENT'S CONSTRUCTION AND MAINTENANCE SCHEDULES ARE BASED UPON THE AGREEMENT THAT MATERIALS AND SERVICES WILL BE PROVIDED ON THE DATES SPECIFIED HEREIN. IF SHIPMENTS ARE NOT MADE OR SERVICES PROVIDED AT THE TIME AGREED UPON, THE DEPARTMENT MAY CANCEL OR PURCHASE ELSEWHERE, AND HOLD THE VENDOR ACCOUNTABLE THEREFOR.

PRICES - THIS ORDER MUST NOT BE FILLED AT PRICES HIGHER THAN THOSE APPEARING HEREON OR IF NO PRICES APPEAR, THEN AT FAIR COMPETITIVE PRICES, WITHOUT AUTHORITY IN WRITING FROM THE DEPARTMENT.

PACKING AND CRATING CHARGES - NO CHARGE WILL BE ALLOWED FOR PACKING, CRATING, DRAYAGE OR STORAGE UNLESS OTHERWISE PROVIDED, HEREIN.

FREIGHT AND EXPRESS CHARGES - SUCH CHARGES MUST BE PREPAID ON ALL SHIPMENTS UNLESS OTHERWISE INSTRUCTED, AND IN CASES WHERE VENDORS ARE ENTITLED TO REIMBURSEMENT, AMOUNT SHOULD BE ENTERED ON INVOICE AND RECEIPTED BILL ATTACHED.

WARRANTY AND INSPECTION - THE VENDOR WARRANTS ALL MATERIALS DELIVERED AND WORKS CONSTRUCTED OR REPAIRED HEREUNDER TO BE FREE FROM DEFECTS OF MATERIAL OR WORKMANSHIP AND TO CONFORM STRICTLY TO THE SPECIFICATIONS, DRAWINGS, OR SAMPLE, SPECIFIED OR FURNISHED BY THE DEPARTMENT. THIS WARRANTY SHALL SURVIVE ANY INSPECTION, DELIVERY, ACCEPTANCE OR PAYMENTS BY THE DEPARTMENT, OF OR FOR THE MATERIALS OR WORK. ALL MATERIALS FURNISHED AND WORKS CONSTRUCTED OR REPAIRED WILL BE SUBJECT TO INSPECTION AND APPROVAL BEFORE ACCEPTANCE BY THE DEPARTMENT AFTER DELIVERY. THE DEPARTMENT RESERVES THE RIGHT TO REJECT AND RETURN AT THE RISK AND EXPENSE OF THE VENDOR, SUCH PORTION OF ANY SHIPMENT WHICH MAY BE DEFECTIVE OR FAIL TO COMPLY WITH SPECIFICATIONS, WITHOUT INVALIDATING THE REMAINDER OF THIS ORDER. MATERIAL RETURNED TO THE VENDOR BY THE DEPARTMENT FOR REPLACEMENT OR CREDIT, WILL BE CHARGED AGAINST THE VENDOR'S ACCOUNT.

SHIPPING - MATERIALS MUST BE PLAINLY MARKED IN ACCORDANCE WITH INSTRUCTIONS ON THE FACE OF THIS ORDER, ALSO WITH THE NAME OF CONSIGNOR AND CONSIGNEE. A COPY OF RAILWAY, EXPRESS COMPANY OR OTHER CARRIER'S SHIPPING BILL, AS WELL AS PACKING LIST, MUST ACCOMPANY EACH SHIPMENT TO DESTINATION.

TITLE TO DRAWING, SPECIFICATIONS AND PATTERNS - THE DEPARTMENT SHALL AT ALL TIMES HAVE TITLE TO ALL DRAWINGS, SPECIFICATIONS, PATTERNS AND DIES FURNISHED TO THE VENDOR OR PAID FOR BY THE DEPARTMENT FOR USE WITH THIS ORDER. THE VENDOR AT ANY TIME SHALL UPON INSTRUCTIONS FROM THE DEPARTMENT RETURN ALL SUCH DRAWINGS, SPECIFICATIONS, PATTERNS OR DIES TO THE DEPARTMENT, WITHOUT ADDITIONAL COST.

TAXES - EXCEPT AS MAY BE OTHERWISE PROVIDED IN THIS ORDER, THE PRICE INCLUDES ALL APPLICABLE FEDERAL TAXES IN EFFECT ON THE DATE OF SHIPMENT.

QUANTITY - THE QUANTITY OF MATERIALS OR SERVICES SPECIFIED ON THIS ORDER MUST NOT BE EXCEEDED WITHOUT FIRST OBTAINING WRITTEN CONSENT OF THE DEPARTMENT. THE DEPARTMENT WILL NOT BE RESPONSIBLE FOR ANY GOODS OR SERVICES DELIVERED, UNLESS ORDERED REGULARLY THROUGH THE CHIEF, PURCHASES & CONTRACTS.

CANCELLATION - THE DEPARTMENT MAY CANCEL ANY PORTION OF THIS ORDER NOT FILLED AS SPECIFIED.

SUPPLEMENTARY INFORMATION - ALL SPECIFICATIONS, DRAWINGS, NOTES, INSTRUCTIONS OR TECHNICAL INFORMATION REFERRED TO IN THIS ORDER, SHALL BE DEEMED TO BE INCORPORATED HEREIN BY REFERENCE AS IF FULLY SET FORTH. ANY DISCREPANCIES OR QUESTIONS SHALL BE REFERRED TO THE CHIEF, PURCHASES & CONTRACTS FOR DECISION OR INTERPRETATION.

CONTRACT - NO AGREEMENT OR OTHER UNDERSTANDING IN ANY WAY MODIFYING THE CONDITIONS OF THE CONTRACT RESULTING FROM THE ACCEPTANCE OF THIS ORDER, WILL BE BINDING UPON THE DEPARTMENT, UNLESS MADE IN WRITING AND SIGNED BY AN AUTHORIZED REPRESENTATIVE OF THE DEPARTMENT.

SPECIAL - ANY TERM OR CONDITION, CONTAINED IN ANY FORM USED BY THE VENDOR TO SUBMIT A QUOTATION OR TO ACKNOWLEDGE THIS ORDER, WHICH WOULD OTHERWISE MODIFY, CONFLICT WITH, OR CONTRADICT ANY TERM OR CONDITION STIPULATED IN THIS ORDER, IS NOT EFFECTIVE UNLESS ACCEPTED IN WRITING BY AN AUTHORIZED REPRESENTATIVE OF THE DEPARTMENT.

Document disclosed under the Access to Information Act
Document divulgué en vertu de la Loi sur l'accès à l'information

DEPARTMENT OF TRANSPORT
OFFICE OF CHIEF, PURCHASES AND CONTRACTS

PURCHASE ORDER

OTTAWA, ONT.

DATE NOV 5/68

SHAW PHOTOGRAMMETRIC SERVICES LIMITED
285A RICHMOND ROAD
OTTAWA 3, ONTARIO

PLEASE INDICATE THE FOLLOWING ON ALL PACKAGES, INVOICES, CORRESPONDENCE, ETC.

ORDER NO. H 3034
FILE NO. 5002-3796
REQ. NO. H 15 CAIE

PLEASE FURNISH THE FOLLOWING MATERIALS, AND/OR SERVICES IN ACCORDANCE WITH THE CONDITIONS STATED BELOW, AND ON THE REVERSE SIDE.

RESP. NO	ACTIVITY	WARRANT	ENCUMBRANCE	LINE OBJ. (RES.)
416115			4006	5241

ITEM NO.	QUANTITY	DESCRIPTION	D.O.T. STOCK NO.	UNIT PRICE
	1	TERRAIN RELIEF MODEL ABOUT 8" X 12" AREA OUTLINED ON AIR MAP 92G1C TO A SCALE 1200 FT. TO 1 INCH SHOWING CONTOURS OF 10 FT SEPARATION AS ON THE MAP WHONOCK B.C. VERTICAL EXAGGERATION OF 1 TO 2: MODEL TO BE TOUCHED UP FROM AERIAL AND OTHER PHOTOS TO CONFORM AS CLOSE TO NATURAL CONDITIONS AS POSSIBLE AND TO BE WATER PROOFED FOR USE IN WATER TUNNEL.		$ 425.00
		ALREADY RECEIVED - PLEASE DO NOT DUPLICATE		
		REF: YOUR QUOTE DATED JUNE 25 AND LETTER DATED OCT 18.		

PG/SS

476.00

DUTY IF ANY - INCLUDED ☐ EXTRA ☐ N/A
(FEDERAL TAXES INCLUDED SUBJECT TO ADJUSTMENT - SEE "SPECIAL NOTE TAXES" IN TENDER.)
FEDERAL SALES TAX - INCLUDED ☐ EXTRA ☒ NOT APPLICABLE ☐
TERMS - _____ % DISCOUNT FOR PAYMENT WITHIN _____ DAYS FROM DELIVERY OF GOODS AT DESTINATION OR RECEIPT OF INVOICES, WHICHEVER IS THE LATER DATE. NET

INVOICES TO BE ITEMIZED IN THE SAME ORDER AS ABOVE. ORIGINAL AND THREE COPIES SENT DIRECT TO:
C.A.I.E. NO. 3 TEMP. BUILDING
OTTAWA 4, ONTARIO
FIFTH COPY TO BE MAILED TO CHIEF, PURCHASES AND CONTRACTS, OTTAWA.

CONSIGN TO: DEPARTMENT OF TRANSPORT
ACCIDENT INVESTIGATION, C.A.I.E. ENGINEERING LAB
BUILDING U.62, UPLANDS, ONTARIO

SHIPMENT WILL BE MADE FROM _____ IN _____ DAYS FROM RECEIPT OF THIS ORDER
F.O.B. DELIVERED IN ACCORDANCE WITH YOUR TENDER DATED _____

CERTIFIED IN ACCORDANCE WITH SECTION 30 OF THE FINANCIAL ADMINISTRATION ACT. C. 12, 1951

FOR COMPTROLLER OF THE TREASURY

P. Grace
FOR CHIEF, PURCHASES AND CONTRACTS

H 3034
ORDER NO.

VENDOR TO SIGN AND RETURN IMMEDIATELY ONE COPY OF THIS ORDER TO DEPARTMENT OF TRANSPORT, OTTAWA.

THIS ORDER IS SUBJECT TO THE TERMS AND CONDITIONS HEREIN AND WE WILL SHIP AS SPECIFIED.

DEFINITE SHIPPING DATES | SIGNATURE OF VENDOR | DATE

DISTRIBUTION

07-000
11-67
REVISED

VENDOR ☐ VENDOR ☐ PURCHASING ☐ CONSIGNEE STORES ☐ CONSIGNEE ACCOUNTANT ☐ STORES ☐ TREASURY ☐ E

Document disclosed under the *Access to Information Act*
Document divulgué en vertu de la *Loi sur l'accès à l'information*

LIQUIDATIONS

DATE	REF. No.	AMOUNT	BALANCE	DATE	REF. No.	AMOUNT	BALANCE

TERMS AND CONDITIONS

DELIVERIES - THE DEPARTMENT'S CONSTRUCTION AND MAINTENANCE SCHEDULES ARE BASED UPON THE AGREEMENT THAT MATERIALS AND SERVICES WILL BE PROVIDED ON THE DATES SPECIFIED HEREIN. IF SHIPMENTS ARE NOT MADE OR SERVICES PROVIDED AT THE TIME AGREED UPON, THE DEPARTMENT MAY CANCEL OR PURCHASE ELSEWHERE, AND HOLD THE VENDOR ACCOUNTABLE THEREFOR.

PRICES - THIS ORDER MUST NOT BE FILLED AT PRICES HIGHER THAN THOSE APPEARING HEREON OR IF NO PRICES APPEAR, THEN AT FAIR COMPETITIVE PRICES, WITHOUT AUTHORITY IN WRITING FROM THE DEPARTMENT.

PACKING AND CRATING CHARGES - NO CHARGE WILL BE ALLOWED FOR PACKING, CRATING, DRAYAGE OR STORAGE UNLESS OTHERWISE PROVIDED, HEREIN.

FREIGHT AND EXPRESS CHARGES - SUCH CHARGES MUST BE PREPAID ON ALL SHIPMENTS UNLESS OTHERWISE INSTRUCTED, AND IN CASES WHERE VENDORS ARE ENTITLED TO REIMBURSEMENT, AMOUNT SHOULD BE ENTERED ON INVOICE AND RECEIPTED BILL ATTACHED.

WARRANTY AND INSPECTION - THE VENDOR WARRANTS ALL MATERIALS DELIVERED AND WORKS CONSTRUCTED OR REPAIRED HEREUNDER TO BE FREE FROM DEFECTS OF MATERIAL OR WORKMANSHIP AND TO CONFORM STRICTLY TO THE SPECIFICATIONS, DRAWINGS, OR SAMPLE, SPECIFIED OR FURNISHED BY THE DEPARTMENT. THIS WARRANTY SHALL SURVIVE ANY INSPECTION, DELIVERY, ACCEPTANCE OR PAYMENTS BY THE DEPARTMENT, OF OR FOR THE MATERIALS OR WORK. ALL MATERIALS FURNISHED AND WORKS CONSTRUCTED OR REPAIRED WILL BE SUBJECT TO INSPECTION AND APPROVAL BEFORE ACCEPTANCE BY THE DEPARTMENT AFTER DELIVERY. THE DEPARTMENT RESERVES THE RIGHT TO REJECT AND RETURN AT THE RISK AND EXPENSE OF THE VENDOR, SUCH PORTION OF ANY SHIPMENT WHICH MAY BE DEFECTIVE OR FAIL TO COMPLY WITH SPECIFICATIONS, WITHOUT INVALIDATING THE REMAINDER OF THIS ORDER. MATERIAL RETURNED TO THE VENDOR BY THE DEPARTMENT FOR REPLACEMENT OR CREDIT, WILL BE CHARGED AGAINST THE VENDOR'S ACCOUNT.

SHIPPING - MATERIALS MUST BE PLAINLY MARKED IN ACCORDANCE WITH INSTRUCTIONS ON THE FACE OF THIS ORDER, ALSO WITH THE NAME OF CONSIGNOR AND CONSIGNEE. A COPY OF RAILWAY, EXPRESS COMPANY OR OTHER CARRIER'S SHIPPING BILL, AS WELL AS PACKING LIST, MUST ACCOMPANY EACH SHIPMENT TO DESTINATION.

TITLE TO DRAWING, SPECIFICATIONS AND PATTERNS - THE DEPARTMENT SHALL AT ALL TIMES HAVE TITLE TO ALL DRAWINGS, SPECIFICATIONS, PATTERNS AND DIES FURNISHED TO THE VENDOR OR PAID FOR BY THE DEPARTMENT FOR USE WITH THIS ORDER. THE VENDOR AT ANY TIME SHALL UPON INSTRUCTIONS FROM THE DEPARTMENT RETURN ALL SUCH DRAWINGS, SPECIFICATIONS, PATTERNS OR DIES TO THE DEPARTMENT, WITHOUT ADDITIONAL COST.

TAXES - EXCEPT AS MAY BE OTHERWISE PROVIDED IN THIS ORDER, THE PRICE INCLUDES ALL APPLICABLE FEDERAL TAXES IN EFFECT ON THE DATE OF SHIPMENT.

QUANTITY - THE QUANTITY OF MATERIALS OR SERVICES SPECIFIED ON THIS ORDER MUST NOT BE EXCEEDED WITHOUT FIRST OBTAINING WRITTEN CONSENT OF THE DEPARTMENT. THE DEPARTMENT WILL NOT BE RESPONSIBLE FOR ANY GOODS OR SERVICES DELIVERED, UNLESS ORDERED REGULARLY THROUGH THE CHIEF, PURCHASES & CONTRACTS.

CANCELLATION - THE DEPARTMENT MAY CANCEL ANY PORTION OF THIS ORDER NOT FILLED AS SPECIFIED.

SUPPLEMENTARY INFORMATION - ALL SPECIFICATIONS, DRAWINGS, NOTES, INSTRUCTIONS OR TECHNICAL INFORMATION REFERRED TO IN THIS ORDER, SHALL BE DEEMED TO BE INCORPORATED HEREIN BY REFERENCE AS IF FULLY SET FORTH. ANY DISCREPANCIES OR QUESTIONS SHALL BE REFERRED TO THE CHIEF, PURCHASES & CONTRACTS FOR DECISION OR INTERPRETATION.

CONTRACT - NO AGREEMENT OR OTHER UNDERSTANDING IN ANY WAY MODIFYING THE CONDITIONS OF THE CONTRACT RESULTING FROM THE ACCEPTANCE OF THIS ORDER, WILL BE BINDING UPON THE DEPARTMENT, UNLESS MADE IN WRITING AND SIGNED BY AN AUTHORIZED REPRESENTATIVE OF THE DEPARTMENT.

SPECIAL - ANY TERM OR CONDITION, CONTAINED IN ANY FORM USED BY THE VENDOR TO SUBMIT A QUOTATION OR TO ACKNOWLEDGE THIS ORDER, WHICH WOULD OTHERWISE MODIFY, CONFLICT WITH, OR CONTRADICT ANY TERM OR CONDITION STIPULATED IN THIS ORDER, IS NOT EFFECTIVE UNLESS ACCEPTED IN WRITING BY AN AUTHORIZED REPRESENTATIVE OF THE DEPARTMENT.

Document disclosed under the *Access to Information Act*
Document divulgué en vertu de la *Loi sur l'accès à l'information*

DEPARTMENT OF TRANSPORT
OFFICE OF CHIEF, PURCHASES AND CONTRACTS

PURCHASE ORDER

OTTAWA, ONT.

DATE NOV 5/68

PLEASE INDICATE THE FOLLOWING ON ALL PACKAGES, INVOICES, CORRESPONDENCE, ETC.

ORDER NO. H 3034
FILE NO. 5002-3796
REQ. NO. H 15 CAIE

SHAW PHOTOGRAMMETRIC SERVICES LIMITED
285A RICHMOND ROAD
OTTAWA 3, ONTARIO

PLEASE FURNISH THE FOLLOWING MATERIALS, AND/OR SERVICES IN ACCORDANCE WITH THE CONDITIONS STATED BELOW, AND ON THE REVERSE SIDE.

RESP. NO	ACTIVITY	WARRANT	ENCUMBRANCE	LINE OBJ. (RES.)
416115			4006	5241

ITEM NO.	QUANTITY	DESCRIPTION	D.O.T. STOCK NO.	UNIT PRICE
	1	TERRAIN RELIEF MODEL ABOUT 8" X 12" AREA OUTLINED ON AIR MAP 92G1C TO A SCALE 1200 FT. TO 1 INCH SHOWING CONTOURS OF 10 FT SEPARATION AS ON THE MAP WHONOCK B.C. VERTICAL EXAGGERATION OF 1 TO 2: MODEL TO BE TOUCHED UP FROM AERIAL AND OTHER PHOTOS TO CONFORM AS CLOSE TO NATURAL CONDITIONS AS POSSIBLE AND TO BE WATER PROOFED FOR USE IN WATER TUNNEL.		$ 425.00
		ALREADY RECEIVED - PLEASE DO NOT DUPLICATE		
		REF: YOUR QUOTE DATED JUNE 25 AND LETTER DATED OCT 18.		

PG/SS

476.00

DUTY IF ANY - INCLUDED ☐ EXTRA ☐ N/A
(FEDERAL TAXES INCLUDED SUBJECT TO ADJUSTMENT - SEE "SPECIAL NOTE TAXES" IN TENDER.)
FEDERAL SALES TAX - INCLUDED ☐ EXTRA ☒ NOT APPLICABLE ☐
TERMS - _____ % DISCOUNT FOR PAYMENT WITHIN _____ DAYS FROM DELIVERY OF GOODS AT DESTINATION OR RECEIPT OF INVOICES, WHICHEVER IS THE LATER DATE. NET

INVOICES TO BE ITEMIZED IN THE SAME ORDER AS ABOVE. ORIGINAL AND THREE COPIES SENT DIRECT TO:
C.A.I.E. NO. 3 TEMP. BUILDING
OTTAWA 4, ONTARIO
FIFTH COPY TO BE MAILED TO CHIEF, PURCHASES AND CONTRACTS, OTTAWA.

CONSIGN TO: **DEPARTMENT OF TRANSPORT**
ACCIDENT INVESTIGATION, C.A.I.E. ENGINEERING LAB
BUILDING U.62, UPLANDS, ONTARIO

SHIPMENT WILL BE MADE FROM _____ IN _____ DAYS FROM RECEIPT OF THIS ORDER
F.O.B. DELIVERED IN ACCORDANCE WITH YOUR TENDER DATED _____

CERTIFIED IN ACCORDANCE WITH SECTION 30 OF THE FINANCIAL ADMINISTRATION ACT. C. 12, 1951

_____ FOR COMPTROLLER OF THE TREASURY

P Grace FOR CHIEF, PURCHASES AND CONTRACTS

H 3034 ORDER NO.

VENDOR TO SIGN AND RETURN IMMEDIATELY ONE COPY OF THIS ORDER TO DEPARTMENT OF TRANSPORT, OTTAWA.

THIS ORDER IS SUBJECT TO THE TERMS AND CONDITIONS HEREIN AND WE WILL SHIP AS SPECIFIED.

DEFINITE SHIPPING DATES | SIGNATURE OF VENDOR | DATE

DISTRIBUTION

07-000 11-67 REVISED VENDOR ☐ VENDOR ☐ PURCHASING ☐ CONSIGNEE STORES ☐ CONSIGNEE ACCOUNTANT ☐ STORES ☐ TREASURY ☐ E

000139

Document disclosed under the *Access to Information Act*
Document divulgué en vertu de la *Loi sur l'accès à l'information*

LIQUIDATIONS

DATE	REF. No.	AMOUNT	BALANCE	DATE	REF. No.	AMOUNT	BALANCE

TERMS AND CONDITIONS

DELIVERIES - THE DEPARTMENT'S CONSTRUCTION AND MAINTENANCE SCHEDULES ARE BASED UPON THE AGREEMENT THAT MATERIALS AND SERVICES WILL BE PROVIDED ON THE DATES SPECIFIED HEREIN. IF SHIPMENTS ARE NOT MADE OR SERVICES PROVIDED AT THE TIME AGREED UPON, THE DEPARTMENT MAY CANCEL OR PURCHASE ELSEWHERE, AND HOLD THE VENDOR ACCOUNTABLE THEREFOR.

PRICES - THIS ORDER MUST NOT BE FILLED AT PRICES HIGHER THAN THOSE APPEARING HEREON OR IF NO PRICES APPEAR, THEN AT FAIR COMPETITIVE PRICES, WITHOUT AUTHORITY IN WRITING FROM THE DEPARTMENT.

PACKING AND CRATING CHARGES - NO CHARGE WILL BE ALLOWED FOR PACKING, CRATING, DRAYAGE OR STORAGE UNLESS OTHERWISE PROVIDED, HEREIN.

FREIGHT AND EXPRESS CHARGES - SUCH CHARGES MUST BE PREPAID ON ALL SHIPMENTS UNLESS OTHERWISE INSTRUCTED, AND IN CASES WHERE VENDORS ARE ENTITLED TO REIMBURSEMENT, AMOUNT SHOULD BE ENTERED ON INVOICE AND RECEIPTED BILL ATTACHED.

WARRANTY AND INSPECTION - THE VENDOR WARRANTS ALL MATERIALS DELIVERED AND WORKS CONSTRUCTED OR REPAIRED HEREUNDER TO BE FREE FROM DEFECTS OF MATERIAL OR WORKMANSHIP AND TO CONFORM STRICTLY TO THE SPECIFICATIONS, DRAWINGS, OR SAMPLE, SPECIFIED OR FURNISHED BY THE DEPARTMENT. THIS WARRANTY SHALL SURVIVE ANY INSPECTION, DELIVERY, ACCEPTANCE OR PAYMENTS BY THE DEPARTMENT, OF OR FOR THE MATERIALS OR WORK. ALL MATERIALS FURNISHED AND WORKS CONSTRUCTED OR REPAIRED WILL BE SUBJECT TO INSPECTION AND APPROVAL BEFORE ACCEPTANCE BY THE DEPARTMENT AFTER DELIVERY. THE DEPARTMENT RESERVES THE RIGHT TO REJECT AND RETURN AT THE RISK AND EXPENSE OF THE VENDOR, SUCH PORTION OF ANY SHIPMENT WHICH MAY BE DEFECTIVE OR FAIL TO COMPLY WITH SPECIFICATIONS, WITHOUT INVALIDATING THE REMAINDER OF THIS ORDER. MATERIAL RETURNED TO THE VENDOR BY THE DEPARTMENT FOR REPLACEMENT OR CREDIT, WILL BE CHARGED AGAINST THE VENDOR'S ACCOUNT.

SHIPPING - MATERIALS MUST BE PLAINLY MARKED IN ACCORDANCE WITH INSTRUCTIONS ON THE FACE OF THIS ORDER, ALSO WITH THE NAME OF CONSIGNOR AND CONSIGNEE. A COPY OF RAILWAY, EXPRESS COMPANY OR OTHER CARRIER'S SHIPPING BILL, AS WELL AS PACKING LIST, MUST ACCOMPANY EACH SHIPMENT TO DESTINATION.

TITLE TO DRAWING, SPECIFICATIONS AND PATTERNS - THE DEPARTMENT SHALL AT ALL TIMES HAVE TITLE TO ALL DRAWINGS, SPECIFICATIONS, PATTERNS AND DIES FURNISHED TO THE VENDOR OR PAID FOR BY THE DEPARTMENT FOR USE WITH THIS ORDER. THE VENDOR AT ANY TIME SHALL UPON INSTRUCTIONS FROM THE DEPARTMENT RETURN ALL SUCH DRAWINGS, SPECIFICATIONS, PATTERNS OR DIES TO THE DEPARTMENT, WITHOUT ADDITIONAL COST.

TAXES - EXCEPT AS MAY BE OTHERWISE PROVIDED IN THIS ORDER, THE PRICE INCLUDES ALL APPLICABLE FEDERAL TAXES IN EFFECT ON THE DATE OF SHIPMENT.

QUANTITY - THE QUANTITY OF MATERIALS OR SERVICES SPECIFIED ON THIS ORDER MUST NOT BE EXCEEDED WITHOUT FIRST OBTAINING WRITTEN CONSENT OF THE DEPARTMENT. THE DEPARTMENT WILL NOT BE RESPONSIBLE FOR ANY GOODS OR SERVICES DELIVERED, UNLESS ORDERED REGULARLY THROUGH THE CHIEF, PURCHASES & CONTRACTS.

CANCELLATION - THE DEPARTMENT MAY CANCEL ANY PORTION OF THIS ORDER NOT FILLED AS SPECIFIED.

SUPPLEMENTARY INFORMATION - ALL SPECIFICATIONS, DRAWINGS, NOTES, INSTRUCTIONS OR TECHNICAL INFORMATION REFERRED TO IN THIS ORDER, SHALL BE DEEMED TO BE INCORPORATED HEREIN BY REFERENCE AS IF FULLY SET FORTH. ANY DISCREPANCIES OR QUESTIONS SHALL BE REFERRED TO THE CHIEF, PURCHASES & CONTRACTS FOR DECISION OR INTERPRETATION.

CONTRACT - NO AGREEMENT OR OTHER UNDERSTANDING IN ANY WAY MODIFYING THE CONDITIONS OF THE CONTRACT RESULTING FROM THE ACCEPTANCE OF THIS ORDER, WILL BE BINDING UPON THE DEPARTMENT, UNLESS MADE IN WRITING AND SIGNED BY AN AUTHORIZED REPRESENTATIVE OF THE DEPARTMENT.

SPECIAL - ANY TERM OR CONDITION, CONTAINED IN ANY FORM USED BY THE VENDOR TO SUBMIT A QUOTATION OR TO ACKNOWLEDGE THIS ORDER, WHICH WOULD OTHERWISE MODIFY, CONFLICT WITH, OR CONTRADICT ANY TERM OR CONDITION STIPULATED IN THIS ORDER, IS NOT EFFECTIVE UNLESS ACCEPTED IN WRITING BY AN AUTHORIZED REPRESENTATIVE OF THE DEPARTMENT.

Document disclosed under the *Access to Information Act*
Document divulgué en vertu de la *Loi sur l'accès à l'information*

DEPARTMENT OF TRANSPORT
OFFICE OF CHIEF, PURCHASES AND CONTRACTS

PURCHASE ORDER

OTTAWA, ONT.

DATE NOV 5/68

PLEASE INDICATE THE FOLLOWING ON ALL PACKAGES, INVOICES, CORRESPONDENCE, ETC.

ORDER NO. H 3034
FILE NO. 5002-3796
REQ. NO. H 15 CAIE

SHAW PHOTOGRAMMETRIC SERVICES LIMITED
285A RICHMOND ROAD
OTTAWA 3, ONTARIO

PLEASE FURNISH THE FOLLOWING MATERIALS, AND/OR SERVICES IN ACCORDANCE WITH THE CONDITIONS STATED BELOW, AND ON THE REVERSE SIDE.

RESP. NO	ACTIVITY	WARRANT	ENCUMBRANCE	LINE OBJ. (RES.)
416115			4006	5241

ITEM NO.	QUANTITY	DESCRIPTION	D.O.T. STOCK NO.	UNIT PRICE
	1	TERRAIN RELIEF MODEL ABOUT 8" X 12" AREA OUTLINED ON AIR MAP 92G1C TO A SCALE 1200 FT. TO 1 INCH SHOWING CONTOURS OF 10 FT SEPARATION AS ON THE MAP WHONOCK B.C. VERTICAL EXAGGERATION OF 1 TO 2: MODEL TO BE TOUCHED UP FROM AERIAL AND OTHER PHOTOS TO CONFORM AS CLOSE TO NATURAL CONDITIONS AS POSSIBLE AND TO BE WATER PROOFED FOR USE IN WATER TUNNEL.		$ 425.00
		ALREADY RECEIVED - PLEASE DO NOT DUPLICATE		
		REF: YOUR QUOTE DATED JUNE 25 AND LETTER DATED OCT 18.		

PG/SS

476.00

DUTY IF ANY - INCLUDED ☐ EXTRA ☐ N/A
(FEDERAL TAXES INCLUDED SUBJECT TO ADJUSTMENT - SEE "SPECIAL NOTE TAXES" IN TENDER.)
FEDERAL SALES TAX - INCLUDED ☐ EXTRA ☒ NOT APPLICABLE ☐
TERMS - _____ % DISCOUNT FOR PAYMENT WITHIN _____ DAYS FROM DELIVERY OF GOODS AT DESTINATION OR RECEIPT OF INVOICES, WHICHEVER IS THE LATER DATE. NET

INVOICES TO BE ITEMIZED IN THE SAME ORDER AS ABOVE. ORIGINAL AND THREE COPIES SENT DIRECT TO:
C.A.I.E. NO. 3 TEMP. BUILDING
OTTAWA 4, ONTARIO
FIFTH COPY TO BE MAILED TO CHIEF, PURCHASES AND CONTRACTS, OTTAWA.

CONSIGN TO: DEPARTMENT OF TRANSPORT
ACCIDENT INVESTIGATION, C.A.I.E. ENGINEERING LAB
BUILDING U.62, UPLANDS, ONTARIO

SHIPMENT WILL BE MADE FROM _____ IN _____ DAYS FROM RECEIPT OF THIS ORDER

F.O.B. DELIVERED IN ACCORDANCE WITH YOUR TENDER DATED _____

CERTIFIED IN ACCORDANCE WITH SECTION 30 OF THE FINANCIAL ADMINISTRATION ACT. C. 12, 1951

_____ FOR COMPTROLLER OF THE TREASURY

P Grace FOR CHIEF, PURCHASES AND CONTRACTS

H 3034 ORDER NO.

VENDOR TO SIGN AND RETURN IMMEDIATELY ONE COPY OF THIS ORDER TO DEPARTMENT OF TRANSPORT, OTTAWA.

THIS ORDER IS SUBJECT TO THE TERMS AND CONDITIONS HEREIN AND WE WILL SHIP AS SPECIFIED.

_____ DEFINITE SHIPPING DATES

_____ SIGNATURE OF VENDOR

_____ DATE

DISTRIBUTION

07-000 11-67 REVISED

VENDOR ☐ VENDOR ☐ PURCHASING ☐ CONSIGNEE STORES ☐ CONSIGNEE ACCOUNTANT ☐ STORES ☐ TREASURY ☐ E.

Document disclosed under the *Access to Information Act*
Document divulgué en vertu de la *Loi sur l'accès à l'information*

LIQUIDATIONS

DATE	REF. No.	AMOUNT	BALANCE	DATE	REF. No.	AMOUNT	BALANCE

TERMS AND CONDITIONS

DELIVERIES - THE DEPARTMENT'S CONSTRUCTION AND MAINTENANCE SCHEDULES ARE BASED UPON THE AGREEMENT THAT MATERIALS AND SERVICES WILL BE PROVIDED ON THE DATES SPECIFIED HEREIN. IF SHIPMENTS ARE NOT MADE OR SERVICES PROVIDED AT THE TIME AGREED UPON, THE DEPARTMENT MAY CANCEL OR PURCHASE ELSEWHERE, AND HOLD THE VENDOR ACCOUNTABLE THEREFOR.

PRICES - THIS ORDER MUST NOT BE FILLED AT PRICES HIGHER THAN THOSE APPEARING HEREON OR IF NO PRICES APPEAR, THEN AT FAIR COMPETITIVE PRICES, WITHOUT AUTHORITY IN WRITING FROM THE DEPARTMENT.

PACKING AND CRATING CHARGES - NO CHARGE WILL BE ALLOWED FOR PACKING, CRATING, DRAYAGE OR STORAGE UNLESS OTHERWISE PROVIDED, HEREIN.

FREIGHT AND EXPRESS CHARGES - SUCH CHARGES MUST BE PREPAID ON ALL SHIPMENTS UNLESS OTHERWISE INSTRUCTED, AND IN CASES WHERE VENDORS ARE ENTITLED TO REIMBURSEMENT, AMOUNT SHOULD BE ENTERED ON INVOICE AND RECEIPTED BILL ATTACHED.

WARRANTY AND INSPECTION - THE VENDOR WARRANTS ALL MATERIALS DELIVERED AND WORKS CONSTRUCTED OR REPAIRED HEREUNDER TO BE FREE FROM DEFECTS OF MATERIAL OR WORKMANSHIP AND TO CONFORM STRICTLY TO THE SPECIFICATIONS, DRAWINGS, OR SAMPLE, SPECIFIED OR FURNISHED BY THE DEPARTMENT. THIS WARRANTY SHALL SURVIVE ANY INSPECTION, DELIVERY, ACCEPTANCE OR PAYMENTS BY THE DEPARTMENT, OF OR FOR THE MATERIALS OR WORK. ALL MATERIALS FURNISHED AND WORKS CONSTRUCTED OR REPAIRED WILL BE SUBJECT TO INSPECTION AND APPROVAL BEFORE ACCEPTANCE BY THE DEPARTMENT AFTER DELIVERY. THE DEPARTMENT RESERVES THE RIGHT TO REJECT AND RETURN AT THE RISK AND EXPENSE OF THE VENDOR, SUCH PORTION OF ANY SHIPMENT WHICH MAY BE DEFECTIVE OR FAIL TO COMPLY WITH SPECIFICATIONS, WITHOUT INVALIDATING THE REMAINDER OF THIS ORDER. MATERIAL RETURNED TO THE VENDOR BY THE DEPARTMENT FOR REPLACEMENT OR CREDIT, WILL BE CHARGED AGAINST THE VENDOR'S ACCOUNT.

SHIPPING - MATERIALS MUST BE PLAINLY MARKED IN ACCORDANCE WITH INSTRUCTIONS ON THE FACE OF THIS ORDER, ALSO WITH THE NAME OF CONSIGNOR AND CONSIGNEE. A COPY OF RAILWAY, EXPRESS COMPANY OR OTHER CARRIER'S SHIPPING BILL, AS WELL AS PACKING LIST, MUST ACCOMPANY EACH SHIPMENT TO DESTINATION.

TITLE TO DRAWING, SPECIFICATIONS AND PATTERNS - THE DEPARTMENT SHALL AT ALL TIMES HAVE TITLE TO ALL DRAWINGS, SPECIFICATIONS, PATTERNS AND DIES FURNISHED TO THE VENDOR OR PAID FOR BY THE DEPARTMENT FOR USE WITH THIS ORDER. THE VENDOR AT ANY TIME SHALL UPON INSTRUCTIONS FROM THE DEPARTMENT RETURN ALL SUCH DRAWINGS, SPECIFICATIONS, PATTERNS OR DIES TO THE DEPARTMENT, WITHOUT ADDITIONAL COST.

TAXES - EXCEPT AS MAY BE OTHERWISE PROVIDED IN THIS ORDER, THE PRICE INCLUDES ALL APPLICABLE FEDERAL TAXES IN EFFECT ON THE DATE OF SHIPMENT.

QUANTITY - THE QUANTITY OF MATERIALS OR SERVICES SPECIFIED ON THIS ORDER MUST NOT BE EXCEEDED WITHOUT FIRST OBTAINING WRITTEN CONSENT OF THE DEPARTMENT. THE DEPARTMENT WILL NOT BE RESPONSIBLE FOR ANY GOODS OR SERVICES DELIVERED, UNLESS ORDERED REGULARLY THROUGH THE CHIEF, PURCHASES & CONTRACTS.

CANCELLATION - THE DEPARTMENT MAY CANCEL ANY PORTION OF THIS ORDER NOT FILLED AS SPECIFIED.

SUPPLEMENTARY INFORMATION - ALL SPECIFICATIONS, DRAWINGS, NOTES, INSTRUCTIONS OR TECHNICAL INFORMATION REFERRED TO IN THIS ORDER, SHALL BE DEEMED TO BE INCORPORATED HEREIN BY REFERENCE AS IF FULLY SET FORTH. ANY DISCREPANCIES OR QUESTIONS SHALL BE REFERRED TO THE CHIEF, PURCHASES & CONTRACTS FOR DECISION OR INTERPRETATION.

CONTRACT - NO AGREEMENT OR OTHER UNDERSTANDING IN ANY WAY MODIFYING THE CONDITIONS OF THE CONTRACT RESULTING FROM THE ACCEPTANCE OF THIS ORDER, WILL BE BINDING UPON THE DEPARTMENT, UNLESS MADE IN WRITING AND SIGNED BY AN AUTHORIZED REPRESENTATIVE OF THE DEPARTMENT.

SPECIAL - ANY TERM OR CONDITION, CONTAINED IN ANY FORM USED BY THE VENDOR TO SUBMIT A QUOTATION OR TO ACKNOWLEDGE THIS ORDER, WHICH WOULD OTHERWISE MODIFY, CONFLICT WITH, OR CONTRADICT ANY TERM OR CONDITION STIPULATED IN THIS ORDER, IS NOT EFFECTIVE UNLESS ACCEPTED IN WRITING BY AN AUTHORIZED REPRESENTATIVE OF THE DEPARTMENT.

Document disclosed under the *Access to Information Act*
Document divulgué en vertu de la *Loi sur l'accès à l'information*

DEPARTMENT OF TRANSPORT
OFFICE OF CHIEF, PURCHASES AND CONTRACTS

PURCHASE ORDER

OTTAWA, ONT.

DATE NOV 5/68

PLEASE INDICATE THE FOLLOWING ON ALL PACKAGES, INVOICES, CORRESPONDENCE, ETC.

ORDER NO. H 3034
FILE NO. 5002-3796
REQ. NO. H 15 CAIE

SHAW PHOTOGRAMMETRIC SERVICES LIMITED
285X RICHMOND ROAD
OTTAWA 3, ONTARIO

PLEASE FURNISH THE FOLLOWING MATERIALS, AND/OR SERVICES IN ACCORDANCE WITH THE CONDITIONS STATED BELOW, AND ON THE REVERSE SIDE.

RESP. NO	ACTIVITY	WARRANT	ENCUMBRANCE	LINE OBJ. (RES.)
416115			4006	5241

ITEM NO.	QUANTITY	DESCRIPTION	D.O.T. STOCK NO.	UNIT PRICE
	1	TERRAIN RELIEF MODEL ABOUT 8" X 12" AREA OUTLINED ON AIR MAP 92G1C TO A SCALE 1200 FT. TO 1 INCH SHOWING CONTOURS OF 10 FT SEPARATION AS ON THE MAP WHONOCK B.C. VERTICAL EXAGGERATION OF 1 TO 2: MODEL TO BE TOUCHED UP FROM AERIAL AND OTHER PHOTOS TO CONFORM AS CLOSE TO NATURAL CONDITIONS AS POSSIBLE AND TO BE WATER PROOFED FOR USE IN WATER TUNNEL.		$ 425.00
		AIREADY RECEIVED - PLEASE DO NOT DUPLICATE		
		REF: YOUR QUOTE DATED JUNE 25 AND LETTER DATED OCT 18.		

PG/SS

476.00

DUTY IF ANY - INCLUDED ☐ EXTRA ☐ N/A
(FEDERAL TAXES INCLUDED SUBJECT TO ADJUSTMENT - SEE "SPECIAL NOTE TAXES" IN TENDER.)
FEDERAL SALES TAX - INCLUDED ☐ EXTRA ☒ NOT APPLICABLE ☐
TERMS - _____ % DISCOUNT FOR PAYMENT WITHIN _____ DAYS FROM DELIVERY OF GOODS AT DESTINATION OR RECEIPT OF INVOICES, WHICHEVER IS THE LATER DATE. NET

INVOICES TO BE ITEMIZED IN THE SAME ORDER AS ABOVE. ORIGINAL AND THREE COPIES SENT DIRECT TO:
C.A.I.E. NO. 3 TEMP. BUILDING
OTTAWA 4, ONTARIO
FIFTH COPY TO BE MAILED TO CHIEF, PURCHASES AND CONTRACTS, OTTAWA.

CONSIGN TO: DEPARTMENT OF TRANSPORT
ACCIDENT INVESTIGATION, C.A.I.E. ENGINEERING LAB
BUILDING U.62, UPLANDS, ONTARIO

SHIPMENT WILL BE MADE FROM _____ IN _____ DAYS FROM RECEIPT OF THIS ORDER
F.O.B. DELIVERED IN ACCORDANCE WITH YOUR TENDER DATED _____

CERTIFIED IN ACCORDANCE WITH SECTION 30 OF THE FINANCIAL ADMINISTRATION ACT. C. 12, 1951

FOR COMPTROLLER OF THE TREASURY

P. Grace
FOR CHIEF, PURCHASES AND CONTRACTS

H 3034
ORDER NO.

VENDOR TO SIGN AND RETURN IMMEDIATELY ONE COPY OF THIS ORDER TO DEPARTMENT OF TRANSPORT, OTTAWA.

THIS ORDER IS SUBJECT TO THE TERMS AND CONDITIONS HEREIN AND WE WILL SHIP AS SPECIFIED.

DEFINITE SHIPPING DATES | SIGNATURE OF VENDOR | DATE

DISTRIBUTION

07-000 11-67 REVISED
VENDOR ☐ VENDOR ☐ PURCHASING ☐ CONSIGNEE STORES ☐ CONSIGNEE ACCOUNTANT ☐ STORES ☐ TREASURY ☐ E)

000143

Document disclosed under the *Access to Information Act*
Document divulgué en vertu de la *Loi sur l'accès à l'information*

LIQUIDATIONS

DATE	REF. No.	AMOUNT	BALANCE	DATE	REF. No.	AMOUNT	BALANCE

TERMS AND CONDITIONS

DELIVERIES - THE DEPARTMENT'S CONSTRUCTION AND MAINTENANCE SCHEDULES ARE BASED UPON THE AGREEMENT THAT MATERIALS AND SERVICES WILL BE PROVIDED ON THE DATES SPECIFIED HEREIN. IF SHIPMENTS ARE NOT MADE OR SERVICES PROVIDED AT THE TIME AGREED UPON, THE DEPARTMENT MAY CANCEL OR PURCHASE ELSEWHERE, AND HOLD THE VENDOR ACCOUNTABLE THEREFOR.

PRICES - THIS ORDER MUST NOT BE FILLED AT PRICES HIGHER THAN THOSE APPEARING HEREON OR IF NO PRICES APPEAR, THEN AT FAIR COMPETITIVE PRICES, WITHOUT AUTHORITY IN WRITING FROM THE DEPARTMENT.

PACKING AND CRATING CHARGES - NO CHARGE WILL BE ALLOWED FOR PACKING, CRATING, DRAYAGE OR STORAGE UNLESS OTHERWISE PROVIDED, HEREIN.

FREIGHT AND EXPRESS CHARGES - SUCH CHARGES MUST BE PREPAID ON ALL SHIPMENTS UNLESS OTHERWISE INSTRUCTED, AND IN CASES WHERE VENDORS ARE ENTITLED TO REIMBURSEMENT, AMOUNT SHOULD BE ENTERED ON INVOICE AND RECEIPTED BILL ATTACHED.

WARRANTY AND INSPECTION - THE VENDOR WARRANTS ALL MATERIALS DELIVERED AND WORKS CONSTRUCTED OR REPAIRED HEREUNDER TO BE FREE FROM DEFECTS OF MATERIAL OR WORKMANSHIP AND TO CONFORM STRICTLY TO THE SPECIFICATIONS, DRAWINGS, OR SAMPLE, SPECIFIED OR FURNISHED BY THE DEPARTMENT. THIS WARRANTY SHALL SURVIVE ANY INSPECTION, DELIVERY, ACCEPTANCE OR PAYMENTS BY THE DEPARTMENT, OF OR FOR THE MATERIALS OR WORK. ALL MATERIALS FURNISHED AND WORKS CONSTRUCTED OR REPAIRED WILL BE SUBJECT TO INSPECTION AND APPROVAL BEFORE ACCEPTANCE BY THE DEPARTMENT AFTER DELIVERY. THE DEPARTMENT RESERVES THE RIGHT TO REJECT AND RETURN AT THE RISK AND EXPENSE OF THE VENDOR, SUCH PORTION OF ANY SHIPMENT WHICH MAY BE DEFECTIVE OR FAIL TO COMPLY WITH SPECIFICATIONS, WITHOUT INVALIDATING THE REMAINDER OF THIS ORDER. MATERIAL RETURNED TO THE VENDOR BY THE DEPARTMENT FOR REPLACEMENT OR CREDIT, WILL BE CHARGED AGAINST THE VENDOR'S ACCOUNT.

SHIPPING - MATERIALS MUST BE PLAINLY MARKED IN ACCORDANCE WITH INSTRUCTIONS ON THE FACE OF THIS ORDER, ALSO WITH THE NAME OF CONSIGNOR AND CONSIGNEE. A COPY OF RAILWAY, EXPRESS COMPANY OR OTHER CARRIER'S SHIPPING BILL, AS WELL AS PACKING LIST, MUST ACCOMPANY EACH SHIPMENT TO DESTINATION.

TITLE TO DRAWING, SPECIFICATIONS AND PATTERNS - THE DEPARTMENT SHALL AT ALL TIMES HAVE TITLE TO ALL DRAWINGS, SPECIFICATIONS, PATTERNS AND DIES FURNISHED TO THE VENDOR OR PAID FOR BY THE DEPARTMENT FOR USE WITH THIS ORDER. THE VENDOR AT ANY TIME SHALL UPON INSTRUCTIONS FROM THE DEPARTMENT RETURN ALL SUCH DRAWINGS, SPECIFICATIONS, PATTERNS OR DIES TO THE DEPARTMENT, WITHOUT ADDITIONAL COST.

TAXES - EXCEPT AS MAY BE OTHERWISE PROVIDED IN THIS ORDER, THE PRICE INCLUDES ALL APPLICABLE FEDERAL TAXES IN EFFECT ON THE DATE OF SHIPMENT.

QUANTITY - THE QUANTITY OF MATERIALS OR SERVICES SPECIFIED ON THIS ORDER MUST NOT BE EXCEEDED WITHOUT FIRST OBTAINING WRITTEN CONSENT OF THE DEPARTMENT. THE DEPARTMENT WILL NOT BE RESPONSIBLE FOR ANY GOODS OR SERVICES DELIVERED, UNLESS ORDERED REGULARLY THROUGH THE CHIEF, PURCHASES & CONTRACTS.

CANCELLATION - THE DEPARTMENT MAY CANCEL ANY PORTION OF THIS ORDER NOT FILLED AS SPECIFIED.

SUPPLEMENTARY INFORMATION - ALL SPECIFICATIONS, DRAWINGS, NOTES, INSTRUCTIONS OR TECHNICAL INFORMATION REFERRED TO IN THIS ORDER, SHALL BE DEEMED TO BE INCORPORATED HEREIN BY REFERENCE AS IF FULLY SET FORTH. ANY DISCREPANCIES OR QUESTIONS SHALL BE REFERRED TO THE CHIEF, PURCHASES & CONTRACTS FOR DECISION OR INTERPRETATION.

CONTRACT - NO AGREEMENT OR OTHER UNDERSTANDING IN ANY WAY MODIFYING THE CONDITIONS OF THE CONTRACT RESULTING FROM THE ACCEPTANCE OF THIS ORDER, WILL BE BINDING UPON THE DEPARTMENT, UNLESS MADE IN WRITING AND SIGNED BY AN AUTHORIZED REPRESENTATIVE OF THE DEPARTMENT.

SPECIAL - ANY TERM OR CONDITION, CONTAINED IN ANY FORM USED BY THE VENDOR TO SUBMIT A QUOTATION OR TO ACKNOWLEDGE THIS ORDER, WHICH WOULD OTHERWISE MODIFY, CONFLICT WITH, OR CONTRADICT ANY TERM OR CONDITION STIPULATED IN THIS ORDER, IS NOT EFFECTIVE UNLESS ACCEPTED IN WRITING BY AN AUTHORIZED REPRESENTATIVE OF THE DEPARTMENT.

Document disclosed under the *Access to Information Act*
Document divulgué en vertu de la *Loi sur l'accès à l'information*

INSTRUCTIONS FOR PURCHASE ORDERS OR AMENDMENTS

Date Nov 1

File # 5'002-3796 / DG.
P.A. Initials

1. To be FULLY completed by purchasing agent

No. of Orders 1

_____(i) (check only) Northern Shipment

Maximum number of copies for unsuccessful tenderers nil (ii)
(Highest number of copies required for any one order).

No. of consignees TED ___ sections ____ OR No. of extra copies for file nil (iii)

Repetitive clause(s) code _____

SPECIAL INSTRUCTIONS:

N.B. Clerical to return to P.A. before actioning, if incomplete.

---

2. Clerical to complete FULLY

BASIC NUMBER OF ORDER COPIES REQUIRED 17

EXTRA COPIES REQUIRED (each order)

(a) Split coding (1 for ea. additional coding) _____
(b) Additional consignees (see instructions) _____
(c) REJECTION LETTERS (1 each) (ii) _____
(d) NORTHERN SHIPMENT (insert 2, if required) (i) _____
(e) Extra copies as P.Q. Requests (iii) _____

TOTAL COPIES FOR MULTILITH PRODUCTION REQUIRED 17

Clerk's Inititals CJ Date 11/11/68

---

3. SPECIAL DISTRIBUTION OF ORDER COPIES BASED ON ABOVE TOTAL

AOMV _____ MWA _____ CAF _____
as required

TED _____ (iii) All copies referred to Originators office.

NORTHERN _____ (i)

NOV - 4 1968

Document disclosed under the *Access to Information Act*
Document divulgué en vertu de la *Loi sur l'accès à l'information*

MEMORANDUM

CLASSIFICATION

C
O
P
Y

TO R.S.A.I. PACIFIC

YOUR FILE No. Votre dossier 5002-715 (AAV)

OUR FILE No. Notre dossier 5002-3796(CAIE)

FROM De C.A.I.

DATE October 24, 1968

FOLD

SUBJECT Sujet Accident - Hiller FG1100, CF-WMO
March 14, 1968

1. Portions of wreckage from the above helicopter are being returned under separate cover. It is noted Okanagan has requested return of these items when the investigation is completed.

2. The following items are being returned - Numbers 11, 18b, 35, 47, 59, 96, 97, 104, 106, 109, 125, 153, 161, 184, 185, 187, 201, 203, 206, 217, 239, 249, 261 and 262. In addition, the following unnumbered items are being returned:

i) One small fin spar piece

ii) Three small battery disconnect pieces

iii) One battery cable

iv) Forward piece of tail rotor drive at break

v) Instruments. (Refer to lab report 24/68)

vi) Two portions of vertical fin (at break).

3. The following five items were lost in bush and tall grass following their timed drop from a helicopter - items 21, 44, 202, 214, and 247. In addition, the two portions of main rotor mast are being retained temporarily in the hope that further engineering studies can be made pertaining to the dynamics of the fracture.

4. Please acknowledge receipt of the above items on the copy of this letter enclosed with the pieces.

"R. M. Logan"

R.M. Logan
for Chief, Accident Investigation Division

Receipted 29 Oct 1968.

000146

Document disclosed under the Access to Information Act
Document divulgué en vertu de la Loi sur l'accès à l'information

R.S.A.I. PACIFIC

RECEIVED NOV 1 '68 PURCHASING AGENT Dept. of Transport OTTAWA

5002-715(AAV)

5002-3796(CAIE)

C.A.I.

October 24, 1968.

Accident - Hiller FH1100, CF-WHO
- March 14, 1968

1. Portions of wreckage from the above helicopters are being returned under separate cover. It is noted Okanagan has requested return of these items when the investigation is completed.

2. The following items are being returned - Numbers 11, 18b, 35, 47, 59, 96, 97, 104, 106, 109, 125, 153, 161, 184, 185, 187, 201, 203, 206, 217, 239, 249, 261 and 262. In addition, the following unnumbered items are being returned:

i) One small fin spar piece
ii) Three small battery disconnect pieces
iii) One battery cable
iv) Forward piece of tail rotor drive at break
v) Instruments (Refer to lab report 24/68)
vi) Two portions of vertical fin (at break).

3. The following five items were lost in bush and tall grass following their timed drop from a helicopter - items 21, 44, 202, 214 and 247. In addition, the two portions of main rotor mast are being retained temporarily in the hope that further engineering studies can be made pertaining to the dynamics of the fracture.

4. Please acknowledge receipt of the above items on the copy of this letter enclosed with the pieces.

Original Signed by
R. M. LOGAN

R.M. Logan
for Chief, Accident Investigation Division

RML:MD

Document disclosed under the *Access to Information Act*
Document divulgué en vertu de la *Loi sur l'accès à l'information*

44021-R

5002-3796(CAIE)

No. 3 Temporary Bldg.,
Ottawa 4, Ontario,
October 24, 1968.

Brouwer and Company,
922 Rogers Building,
470 Granville Street,
Vancouver, British Columbia.

Attention: Mr. M.R. McCubbin

Dear Mr. McCubbin:

This is with reference to your letter of October 8, 1968.

Examination of most material forwarded to this Laboratory has been completed and a report has been prepared. Present policy does not permit release of the above report prior to final approval of the published accident report. The date at which the report will be available is still uncertain, but your request for copies has been noted.

Six small items of wreckage were lost in bush and high grass following a timed drop from a hovering helicopter. With the exception of the above six items and two pieces from the top of the mast (mast fracture faces), the remaining items should be shipped to our Vancouver office before the end of this week.

The mast pieces are being retained temporarily in the hope it may become possible to carry out further engineering study related to the kinetics of failure. Rest assured these pieces will not be released to any person other than Okanagan or their representative.

Yours truly,

Original Signed by
R. M. LOGAN

(R.M. Logan)
for Chief, Accident Investigation Division

RML:MD

Document disclosed under the *Access to Information Act*
Document divulgué en vertu de la *Loi sur l'accès à l'information*

R.S.A.I. PACIFIC

5002-715(AAV)

5002-3796(CAIB)

October 22, 1968.

C.A.I.

Accident - Hiller FH-1100, CF-AMO
Engineering Laboratory Report No. 24/68

1. Enclosed please find one copy (Copy No. 2) of the above referenced Engineering Report, for your information and retention. Please acknowledge receipt of this Report on the attached sheet.

Original Signed by
R. M. LOGAN

for Chief, Accident Investigation Division

Encl.

Document disclosed under the *Access to Information Act*
Document divulgué en vertu de la *Loi sur l'accès à l'information*

5002-3796(CAIE)

No. 3 Temporary Bldg.,
Ottawa 4, Ontario,
October 17, 1968.

R.J. Landry Associates Ltd.,
242 City Centre,
880 Wellington Street,
Ottawa 3, Ontario.

Dear Mr. Landry:

Re: Accident, Hiller FH1100, CF-LMO,
Approximately 5 Miles East of
Fort Langley, B.C. - March 14, 1968.

Many thanks for the copy of Revision 6 of the FH1100 Flight Manual and for the copy of the message from Mr. John E. Burke.

The message says that "a concentrated analytical and flight test program" was started. Since the temporary speed restriction has been lifted, we assume that this program has been done.

Could you please send us the results of the program which was undertaken.

Yours truly,

Original Signed by
A. J. W. MELSON
(A.J.W. Melson)
for Chief, Accident Investigation Division.

AJWM:MD

Document disclosed under the *Access to Information Act*
Document divulgué en vertu de la *Loi sur l'accès à l'information*

C.A.E.

Oct. 11, 1968.

5002-3796 (CAIE)
5002-1 (AIGT)

(1) A.I.G.T. E-19 to 17 Oct 68

Accident - Hiller FH 1100 CF-WMO,
Approx. 5 miles east of Fort Langley, B.C.,
March 14, 1968.

1. This Division requests the following information in connection with the continuing investigation into the above noted accident.

The airspeed limitation noted on the attached sheets was lifted on June 12, 1968 by Revision 7 of the Flight Manual.

Would you please obtain the results of the "concentrated analytical and flight test program" mentioned on the first sheet.

2. May this information be provided as soon as possible please.

A.J.W. Milbourn
Accident Investigation, Technical. CAIE

(2) CAIE Ref Telecon Rosewarne/Lecheminant Oct 16/68.
CAE normally is not interested in having this information since the FAA looks after the airworthiness of the FH 1100. CAE cannot independently review & monitor the technical details of airworthiness items of foreign designed aircraft operating in Canada. We must rely on A/W authority in the country of origin to investigate and advise the action taken in such matters. CAE looks after aircraft such as the Beaver & Otter.
Suggest it will be more expeditious for you to go directly to the US for this rather than through CAE.

H.P. Rosewarne
16 Oct 68.

000151

Document disclosed under the Access to Information Act
Document divulgué en vertu de la Loi sur l'accès à l'information

12 APR 1968

PLEASE SEND THE FOLLOWING MESSAGE TO ALL ADDRESSES ON THE ATTACHED LIST:

A CONCENTRATED ANALYTICAL AND FLIGHT TEST PROGRAM IS UNDERWAY TO DETERMINE IF A COMBINATION OF ENVIRONMENTAL DISTURBANCE, OVERSPEED AND CONTROL TECHNIQUE CAN CAUSE A SAFETY OF FLIGHT SITUATION.

PENDING RESULTS OF THIS PROGRAM, OPERATORS ARE ADVISED TO:

1. TEMPORARILY OBSERVE AN AIRSPEED LIMITATION OF NO MORE THAN 110 MPH AT ALL TIMES.
2. AVOID ANY ABRUPT CONTROL MOVEMENTS WHEN FLYING IN TURBULENCE.

JOHN E. BURKE
MGR. OF SERVICE, FAIRCHILD HILLER CORPORATION
Dept. 911

cc: B. Davis, J. Grabber, V. Davis, J. Lovell, J. Bonnell, E. Morton, C. Blaney, J. Sweely, R. Spaulding, E. Eckhart, D. Meadowcroft

Document disclosed under the *Access to Information Act*
Document divulgué en vertu de la *Loi sur l'accès à l'information*

SECTION I
OPERATING LIMITATIONS

Compliance with this section is mandatory.

WEIGHT LIMITS

The maximum approved weight is 2750 pounds.

LONGITUDINAL CENTER OF GRAVITY LIMITS

Forward limit: Station 95.5 Aft limit: Station 101.5

Reference datum (Station 0) is 100.0 inches forward of bulkhead at passenger seat back.

NOTE

See Section IV for weight and balance information.

LATERAL CENTER OF GRAVITY LIMITS

± 2.5 inches from longitudinal centerline of fuselage.

AIRSPEED LIMITS

Sea level never-exceed speed (Vne) is 110 MPH IAS:*

Decrease Vne 5.2 MPH per 1000 feet of altitude above 5000 feet (See table below)

STD. ALT.	S.L.	5,000	10,000	15,000	15,385
Vne-MPH IAS**	110	110	84	58	56

*With either 52 inch or 72 inch horizontal stabilizer.
**Corrected for instrument error.
No variation with temperature is required.

Revision 6
FAA Approved 25 April 1966

000153

Document disclosed under the Access to Information Act
Document divulgué en vertu de la Loi sur l'accès à l'information

President: R. P. Shaw

Vice-President: Maj. W. A. Johnstone

SHAW PHOTOGRAMMETRIC SERVICES LIMITED

285A Richmond Road
OTTAWA 3, ONT.
TEL. 729-7308

Custom Map Makers

18 Oct. 1968.

RECEIVED
Dept. of Transport
OTTAWA
68 OCT 23 AM 8:38
MESSAGE AGENT

RHPT

Chief,
Purchases and Contracts,
Department of Transport,
Hunter Building,
OTTAWA, Ont.

For the attention of Mr. Grace.

Reference: Relief model for Mr. A.N.LeCheminant,
Accident Investigation Division,
D.O.T., Uplands, Ottawa.

(1)

Dear Sir,

We enclose herewith a copy of our flimsy of the letter of quotation that we sent to Mr. LeCheminant on June 25th last covering the construction of the relief model mentioned.

We wish to confirm that the prices quoted remain unchanged.

Since the date of this quotation the scale exaggeration and horizontal scale of the model have been determined and these changes are noted against the margins.

If there are any details in which you or Mr. LeCheminant are not completely in accord, please do not hesitate to let us know and we shall alter to suit.

We thank you for the opportunity to quote on our services.

We remain, sir,

Yours truly,

SHAW PHOTOGRAMMETRIC SERVICES LIMITED.

per.....
R.P. Shaw, Pres.

(2)

C.A.I.E. Letter in regard

We spoke. Please note deletions and scales recommended on attached copy of quote. For your concurrence or otherwise and return

RHPT 21/10

(3)

ABPP

This is fine as noted / this date 23/10/68

Model has been dispatched

CAIE

000154

Document disclosed under the *Access to Information Act*
Document divulgué en vertu de la *Loi sur l'accès à l'information*

25 June 1968

Mr. A.N.LeCheminant,
Accident Investigation Division,
Department of Transport,
Uplands Airport,
Ottawa, Canada.

Dear Mr. LeCheminant,

We are returning herewith the following materials that you lent to us yesterday for the purpose of preparing an estimate for you on the building of a relief model of a site that you presently have under study:

1 enlargement of a part of aerial photo A 17282 -34
2 aerial photos - contact prints- A 17282 34 and 35.
1 1:25,000 Topo map sheet number 92 G 1e WHONOCK, B.C.

By measurement of three distances on the map and on the enlarged aerial photo we arrived at an average scale for the enlargement of 550 ft. / 1 inch.

Our cost to build the model along the following lines would be $425.00 plus any applicable sales taxes.

Delivery would be made 4 weeks after receipt of your order.

The scale of the model would be of your choosing. For your convenience, we have attached the 8" X 12" piece of mylar drafting film to your enlarged photo and have shown thereon the boudaries of the land that would be covered by an 8" X 12" model at various horizontal scales.

The vertical exaggeration would be to your choosing. — 2:1

The model would be mounted on a piece of hardwood plywood ~~under which would be embedded a suitable hold-down device to match the hold-down means in the water tank. We assume that this would be in the form of nuts or bolts embedded.~~

The model would show
Relief based on the 10 foot contours shown on the 1:25,000 map.
Most buildings - made close to scale and oriented.
Trees and bush cover in position and to scale.
All vertical scale exaggerated according to your selection. (2:1

000155

Document disclosed under the *Access to Information Act*
Document divulgué en vertu de la *Loi sur l'accès à l'information*

As the model reaches the finishing stage, the aerial photos will be examined stereoscopically and the model "touched up" to assure maximum simulation of the ground.

The entire model to be waterproofed.

The colours will be according to the materials used NOT true to nature.

delete ~~The finished model will be fitted into a plexiglass case that will be removable.~~

We are very interested in this project and would be most pleased to serve you should you decide to use our services.

Thank you for this opportunity to quote.

Yours very truly,

SHAW PHOTOGRAMMETRIC SERVICES LIMITED.

per.....
R.P.Shaw, Pres.

000156

BROUWER & COMPANY

GENERAL INSURANCE ADJUSTERS LTD.

5002-3796

CABLE ADDRESS: "BROUWCO"

TELEPHONE: MUTUAL 3-2521

MAIN OFFICE
922 ROGERS BUILDING
470 GRANVILLE STREET

VANCOUVER 2, B. C.

20793

VANCOUVER
J. BROUWER
T. J. HANLY
D. R. MACFARLANE
G. L. CRAIG
J. F. BOREHAM
V. SMITH, A.I.I.C.
M. R. McCUBBIN, AIRCRAFT ENG.
G. J. DUNAWAY
J. M. HOEY
G. A. BARCLAY
D. T. DOUGHTY
G. P. HOLMES
G. E. LEECH, APPRAISER
M. C. OSBORNE, OFFICE MGR.

FIRE AND PROPERTY DEPT.
R. A. McDONALD, A.I.I.C. MGR.

NEW WESTMINSTER
B. P. HANBY, A.I.I.C.
H. G. ROBINSON
D. W. ELLIOTT
H. E. COULTER
M. V. CLINGWALL

HOPE
J. A. MacDONALD

KELOWNA
P. J. DAVIDSON
R. L. SAUNDERS

VERNON
M. A. COE

KAMLOOPS
L. A. SOMERS
R. S. RING
G. H. NESBITT

QUESNEL
A. BROWN

PRINCE GEORGE
D. S. McEWAN

TERRACE
P. PRINS

POWELL RIVER
R. B. BOREHAM

NELSON
M. J. ELMES

VICTORIA
G. P. KITSON
R. K. LITTLE
R. E. ROBSON
V. F. DOWNARD

FIRE AND PROPERTY DEPT.
R. J. GARLAND, ASSOCIATE
J. A. BELL

DUNCAN
J. K. BATESON
J. C. SHULTZ
W. L. BOLTON

NANAIMO
H. P. McCALLUM
J. B. GRANT

COURTENAY
F. L. MURRAY

CALGARY
J. P. KLEMP, F.I.I.C.
G. W. BJORNDAHL
N. R. LARDEN
G. HARTLEY

EDMONTON
B. WADDINGHAM
M. O. LEE
G. BOURASSA
B. W. THURBER
R. V. GLOVER

REGINA
C. M. PAGET
D. E. MORTIN

SASKATOON
T. F. QUINN

WINNIPEG
R. W. LANYON
R. K. TURNER

October 8, 1968

Our File No. 44021-R

Assistant Deputy Minister, Air
Department of Transport
#3 Temporary Building
Ottawa, Ont.

Attention: Chief, Accident Investigation

Dear Sir:

Re: Okanagan Helicopters Ltd.
Hiller FH-1100 CF-WMO
Accident Date March 4, 1968.

Further to our letter of May 3, 1968 and our conversations with your Mr. le Cheminant during his recent visit to the Edmonton and Vancouver regions.

Since considerable time has passed we would request your advice as to when we may expect to receive copies of your laboratory test report as we earlier requested and the Advance Summary Accident Report.

We would also request your assurance that all parts taken by the Investigators for laboratory testing will be returned to Okanagan Helicopters Ltd. as soon as your Investigation is complete.

Yours very truly

BROUWER & COMPANY

M. R. McCubbin
Aircraft Engineer
License VRM 356

MRMc/bm

cc: Department of Transport
Vancouver

000157

Document disclosed under the *Access to Information Act*
Document divulgué en vertu de la *Loi sur l'accès à l'information*

Document disclosed under the *Access to Information Act*
Document divulgué en vertu de la *Loi sur l'accès à l'information*

5002-3796(CAIE)

No. 3 Temporary Bldg.,
Ottawa 4, Ontario,
September 13, 1968.

Director of Meteorological Services,
315 Bloor Street West,
Toronto 5, Ontario.

Attention: Mr. Morrison

Dear Mr. Morrison:

Further to our letter 25 July in respect to an accident to Hiller FH1100, CF-WMO, I enclose a copy of Accident Report 1086 which illustrates use that was once before made of a water tunnel model.

Yours truly,

Original Signed by
A. N. Le CHEMINANT

(A.N. Le Cheminant)
for Chief, Accident Investigation Division

Enclosure

ANL:HD

Document disclosed under the Access to Information Act
Document divulgué en vertu de la Loi sur l'accès à l'information

5-0-5702-3796

DEPARTMENT OF TRANSPORTATION
FEDERAL AVIATION ADMINISTRATION

EASTERN REGION
FEDERAL BUILDING
JOHN F. KENNEDY INTERNATIONAL AIRPORT
JAMAICA, NEW YORK 11430

DATE: JUL 24 1968

IN REPLY REFER TO: EA-212

SUBJECT: Request for Engineering Data on Fairchild Hiller FH-1100 Helicopters.

15421

TO: Department of Transport
Attention: Chief, Accident Investigation Division
No. 3 Temporary Building
Ottawa 4, Ontario, Canada

CAIR

This is in reference to your request of May 23, 1968, directed to our Washington Office for engineering data showing the strength and stiffness of the fin and tail rotor assembly. In response to our request for this data, Fairchild Hiller has written to us stating that they consider their reports to be proprietary information, not to be released without their written permission. We, therefore, regret that we cannot comply with your request and we can only suggest that you write directly to Fairchild Hiller to obtain the data you need.

W. F. Norton

W. F. NORTON
Chief, Engineering & Manufacturing Branch, EA-210
Flight Standards Division

Document disclosed under the *Access to Information Act*
Document divulgué en vertu de la *Loi sur l'accès à l'information*

NE

Document disclosed under the *Access to Information Act*
Document divulgué en vertu de la *Loi sur l'accès à l'information*

5002-3796(CAIE)

No. 3 Temporary Bldg.,
Ottawa 4, Ontario,
July 25, 1968.

Director of Meteorological Services,
315 Bloor Street West,
Toronto 5, Ontario.

Attention: Dr. J. Clodman

Dear Sir:

Re: Accident Hiller FH1100, CF-UMO
March 14, 1968

Further to recent conversation with Dr. Clodman, meteorological information from Vancouver existing about the time of the accident to this aircraft has just been received. As described by telephone, this machine, which is a relatively high speed modern jet engine helicopter, lost its main rotor in a matter of one complete revolution. The evidence available to date indicates this to have most probably been the result of ground turbulence.

Because of the possible further implications of such machines flying through turbulent areas an attempt is being made to gather information about this occurrence as deeply as possible. In particular to assess whether this occurrence could be considered an abnormality or something which could be repeated under similar wind conditions. It is, therefore, proposed to make models of the area indicated on the attached stereo prints at a scale of approximately 550 feet to the inch. This will only give a vertical height of about half an inch in the model. Before proceeding with the model, which is restricted in size to allow for fitting to the NRC water tunnel, your opinion is requested as to whether or not we should introduce a vertical exageration and if so to what degree. It is noted that in a Japanese report of the break-up of a BAC 707 to the lee of Mount Fuji that an exageration of 1 to 1.2 was used. A copy of the relevant page of that report is attached. It is not anticipated the water tunnel experiment will provide much more than a qualitative picture of the possible flow, however, it is hoped that by calculating the force required to fracture the shaft that some quantitative value might be ascertained for the strength of gust required to cause the accident.

Yours truly,

Original Signed by
A. N. LeCHEMINANT

(A.N. le Cheminant)
for Chief, Accident Investigation Divisi

Attach.
ANL:ED

000162

Document disclosed under the *Access to Information Act*
Document divulgué en vertu de la *Loi sur l'accès à l'information*

The vertical stabilizer and the port horizontal stabilizer broke away somewhat earlier than the starboard outer wing, engine pylons and the forward fuselage.

d) Metallurgical Tests of Vertical Stabilizer Rear Spar Right Hand Attachment Fitting (on Fuselage Side)

The tests conducted by the Boeing Co. revealed that the fracture started from the upper outboard body frame attachment hole and progressed in a ductile tensile manner.

The fatigue cracks found in the bolt hole were 1.9 and 1.4 millimetres deep. The final fracture was caused by a sudden load substantially greater than the load which caused the fatigue cracks in the fitting. The mechanical qualities of the material used were up to specification.

e) Strength Test of Vertical Stabilizer Rear Spar Right Hand Attachment Fitting (on Fuselage Side)

A test was made by Boeing on a similar attachment fitting in which the fatigue cracks found in the bolt hole of G-APFE were simulated. When the load was increased at 1000 kips/s the fitting failed at a load of 163 kips. This load corresponds to approximately 110% limit design fin gust load.

f) Model Experiment of Destruction Sequence of Tail

Using 1/15 scale models of the empennage and the rear end of the fuselage of a Boeing 707, made of foamed plastic material, an investigation was made to determine whether the vertical stabilizer hits the port horizontal stabilizer when it breaks up at its fuselage attachment portion due to lateral load from the right side.

The results supported the assumption that the dents, scratches and transferred paint on the port horizontal stabilizer were mostly caused by it being struck by the vertical stabilizer.

g) Falling Conditions of the Main Wreckage

A film record was available of the last 8 seconds of the descent of the main wreckage. This was analysed and indicated that the falling speed was approximately 70 metres/second, rotating cycle approximately 15 seconds, and wind-direction approximately 290°.

h) Wind Tunnel Test of Terrain Model of Mt. Fuji

As a preliminary to the investigation of air currents around Mt. Fuji, the Meteorological Research Institude, Meteorological Agency conducted a wind tunnel test using a terrain model of Mt. Fuji.

The test was made in a Goettingen type wind tunnel of 1.5 metres diameter with wind velocity of 2 metres/second. The speed of the air stream was measured by a hot wire anemometer with platinum wire of 5 microns diameter and 3 millimetres long, and a hot wire anemoscope with approximately equal dimensions. The scale of the terrain model of Mt. Fuji (covering an area 50 kilometres to the east, west, south and north of the centre of Mt. Fuji) was 1 to 50,000, with the ratio of horizontal distance and height of 1:1.2.

000163

Document disclosed under the *Access to Information Act*
Document divulgué en vertu de la *Loi sur l'accès à l'information*

The results of the experiment are interesting and are outlined below. However, they cannot be applied directly to the actual air flow around Mt. Fuji, particularly in view of lapse rate and wind shear considerations.

i) In a region from the summit to 20 kilometres leeward there exists a reverse current in the lower layers, which according to circumstances, may not be distinct but becomes a diversified current.

In this region, the existence of the reverse current sometimes results in descent of the upper layer air current over a range from the summit to a fairly far point and the descent of the air current may take place intermittently at the end of the descent range.

ii) In an area beyond 20 kilometres from the summit, no air eddies of distinct form can be detected because turbulence due to terrain has largely decayed at these distances.

iii) Turbulence due to terrain is considered to extend within a wake wedge angle of approximately 60° in the leeward, horizontal direction. It also extends vertically to the upper layer by approximately 30% of the height of the mountain.

iv) In the air current blowing leeward around the mountain is found a sudden variation of wind velocity which is considered to be due to trail eddies. It should be noted that the average wind velocity in this area in the leeward side is higher than that of the surrounding current.

i) Formation of Mountain Waves

i) Mountain Waves due to a Mountain Range

An investigation was conducted on the formation of mountain waves due to the Kiso Mountain Range and the Akaishi Mountain Range in the windward of Mt. Fuji.

Analysis of the upper air observations at Wajima, Hamamatsu and Tateno on 5th March, revealed the existence of a stable layer below 3,000 - 4,000 metres with winds of 60 - 70 knots blowing approximately at right angles to the two mountain ranges. The wind velocities at Yonago and Wajima increased more or less uniformly with altitude. The above meteorological conditions favoured the formation of mountain waves in the lee of the Kiso Mountain Range and the Akaishi Mountain Range on the afternoon of 5th.

In the weather satellite pictures taken at 1330 hours on the 5th clouds were present in the lee of the Suzuka Mountain Range; these are considered to have been formed in mountain waves but such clouds were not found in the lee of the Kiso and Akaishi Mountain Ranges. This was due to the fact that the air was too dry but it does not preclude the existence of mountain waves.

ii) Mountain Waves associated with Isolated Peak

Wurtel*[4] suggests that an isolated peak can form a kind

* WMO Technical Note No. 54 (1960)

000164

Document disclosed under the *Access to Information Act*
Document divulgué en vertu de la *Loi sur l'accès à l'information*

of mountain wave system with form different from that of mountain waves due to mountain ranges. In the case of Mt. Fuji, the possibility of the existence of such waves can be deduced from clouds of a horse shoe shape formed in its lee. (As mentioned earlier the air was too dry to support such cloud formation.)

iii) Turbulence accompanying Mountain Waves

Turbulence accompanying mountain waves initiated by mountain ranges may be qualified as follows:* 5

In powerful mountain waves, rotors often form and severe turbulence is usually associated with rotors.

Apart from this severe turbulence may occur at the fringe of a mountain wave system by interference with surrounding current.

Based on the assumption that the breakdown of mountain waves results in severe turbulence, severe turbulence occurs when and where the wave motion is interrupted. Such severe turbulence is likely to be of small extent and short life.

Since the energy supply for turbulence accompanying mountain waves is stored in gravity waves, it is possible that turbulence may become extremely severe if powerful (high energy) mountain waves develope.

2. Analysis and Conclusions

2.1 Analysis

The investigation revealed that the qualifications, flight experience, work load, physical condition etc. of the flight crew had no bearing on the accident.

The indicated airspeed at the time of the accident is estimated to have been between 300 and 380 knots, judging from the estimated trim position of the horizontal stabilizer, and it is highly probable that the airspeed was approximately 335 knots. The airspeed at the time of the accident deduced from the analysis of the 8 mm color film taken by a passenger in the cabin was 320 to 370 knots. Although no other data related to airspeed were available due to destruction of the flight recorder by fire, 335 knots EAS was taken as a standard reference for the analysis of airframe strength etc. since the estimates of air speed ranges arrived at on these two bases are substantially similar.

Judging from the evidence of eye witnesses and the scattered distribution of the wreckage, it is clear that the aircraft broke up in the air. However, even if it is assumed that the break-up started from one or more of the major portions which broke off in the air, it was not possible to establish the breakup sequence *6 of the major portions of the entire aircraft. It was also impossible to determine clearly how much the fatigue cracks in the vertical stabilizer rear spar starboard fitting contributed to the breakup.

---

*5 WMO Technical Note No. 38 (1961)

*6 It is evident that the vertical stabilizer broke away at its attachment to the fuselage due to a leftward load, and fell to the left, hitting the port horizontal stabilizer which in turn was destroyed by the impact. Later, the starboard horizontal stabilizer and the aft fuselage (including the tail cone) broke away.

Document disclosed under the *Access to Information Act*
Document divulgué en vertu de la *Loi sur l'accès à l'information*

MEMORANDUM

CLASSIFICATION

TO A: ADMA, OTTAWA
No. 3 Temporary Bldg.
ATTN: CAIE

YOUR FILE No. Votre dossier: 5002-3796

OUR FILE No. Notre dossier: 5002-715 (AAV)

FROM De: RDAS, VANCOUVER

DATE: July 18, 1968

FOLD

SUBJECT Sujet: ACCIDENT - Hiller FG-1100, CF-WMO March 14, 1968.

RECEIVED
JUL 23 1968

13445

CAIE

1. As requested in our telephone conversation of July 12, 1968, we are sending you the meteorological data obtained from the Vancouver Weather Office.

2. We have also approached Mr. K. F. Harry, Regional Superintendent, General Weather Services, on the feasibility of having weather conditions recorded at the accident scene simultaneous with recordings at Vancouver and Abbotsford. His feelings are that more accurate and useful information could be obtained and conditions duplicated in wind tunnel tests. However, once we receive your letter outlining the information you require we will discuss this with Mr. Harry and be able to give you a more definite answer on the subject.

P. M. Young
for Regional Director, Air Services

ENCL Forwarded to Met Service - see letter d. 25 July 68. lf

CGSB—6GP22a PP&S Cat. No. 3591

Document disclosed under the *Access to Information Act*
Document divulgué en vertu de la *Loi sur l'accès à l'information*

CAI
10/5

Document disclosed under the *Access to Information Act*
Document divulgué en vertu de la *Loi sur l'accès à l'information*

5002-3796

No. 3 Temporary Building
Ottawa 4, Ontario

July 11, 1968

Dept. of Energy, Mines & Resources,
National Air Photographic Library,
Booth St., Ottawa, Ont.

Gentlemen:

Please refer to your Form 8 E39554 dated 14th June. It is requested that this order M.1143 be repeated with an additional copy of the enlargement. The enlargement is to be of the area indicated on the attached zerox copy of 17282-34.

Yours truly,

Original Signed by
A. N. Le CHEMINANT

(A.N. Le Cheminant)
for Chief, Accident Investigation
Division

ANL/nh
attach

Document disclosed under the *Access to Information Act*
Document divulgué en vertu de la *Loi sur l'accès à l'information*



AIR PHOTO DIVISION - ENERGY, MINES & RESOURCES - CANADIAN GOVT. COPYRIGHT

Document disclosed under the *Access to Information Act*
Document divulgué en vertu de la *Loi sur l'accès à l'information*

DEPARTMENT OF TRANSPORT

MESSAGE FORM

FILE NO. 5002-3796

DATE JULY 2 19 68

COMPLETE THIS SECTION FOR COMMERCIAL MESSAGES ONLY | CHARGE

RDAS VANCOUVER

CAIE 44 RE UR AAV 48. HILLER FH1100 CF-WMO. NO REQUIREMENT FOR ADDITIONAL PARTS ANTICIPATED. ITEMS MAY BE RELEASED TO OWNER. A SKETCH SHOWING ORIGINATION OF CANOPY ITEMS WOULD BE USEFUL FOR REFERENCE IF OPPORTUNITY TO MAKE SKETCH CAN BE ARRANGED.

DICAV

ANL/NH

38-0014
9-63

FILE COPY

000170

Document disclosed under the *Access to Information Act*
Document divulgué en vertu de la *Loi sur l'accès à l'information*

5003-3-796

CAIE

OTTAWA
AERADIO

JUN 24 17 45 68

ZCZC OHA090

JJ CYHQYY

212140 CYVRRO

ADMA OTTAWA

ATTN CAIE

AAV 48. FURTHER OUR LETTER MAY 30/68 RE ACCIDENT HILLER FH 1100 CF/WMO PLS ADVISE IF FURTHER PARTS OF WRECKAGE REQUIRED AS WRECKAGE BEING RELEASED TO OWNERS.

RDAS VANCOUVER

AR

CONFIRMATION COPY
Phoned to MD by GA

NNNN

Document disclosed under the *Access to Information Act*
Document divulgué en vertu de la *Loi sur l'accès à l'information*

WMH/JDS

68016124

5002-3796(CAIO)

OTTAWA, Ontario,
June 20, 1968.

Mr. I.E. Tufts,
Solicitor,
Workmen's Compensation Board of B.C.,
707 West 37th Avenue,
Vancouver 13, B.C.

Dear Sir:

This is in reference to your letter of June 13, 1968, concerning the accident to Hiller FH-1100 helicopter, CF-WMO, which occurred near Langley, B.C., on March 14, 1968.

Due to the nature of this accident, an extensive technical investigation is in progress and it is apparent that there will be considerable delay in the production of the approved accident report. Please be assured we will provide you with a copy of the approved report at the earliest possible date.

All we can say at this time is that evidence established the aircraft broke up in flight, crashed and burned.

Yours truly,

W. M. Howes,
(for) Chief, Accident Investigation,
Civil Aviation Branch.

cc: RDAS Vancouver

Document disclosed under the *Access to Information Act*
Document divulgué en vertu de la *Loi sur l'accès à l'information*

5002- 3796

WORKMEN'S COMPENSATION BOARD OF BRITISH COLUMBIA
707 WEST 37th AVENUE, VANCOUVER 13, BRITISH COLUMBIA. TELEPHONE 266-0211

June 13th, 1968.

9548

CA10

Director,
Civil Aviation,
Department of Transport,
No. 3 Temporary Building,
Ottawa, Ontario.

Dear Sir:

Re: Par F. Fletcher, dec'd,
Claim No. 68016124

We understand your Department has completed an investigation into the crash of a helicopter near Langley, B.C. on March 14, 1968 which was piloted by the above named deceased.

We would appreciate receiving whatever information you are able to provide us in connection with your investigation and findings.

Yours truly,

I.E. Tufts,
Solicitor.

IET:md

Document disclosed under the *Access to Information Act*
Document divulgué en vertu de la *Loi sur l'accès à l'information*

Document disclosed under the *Access to Information Act*
Document divulgué en vertu de la *Loi sur l'accès à l'information*

5002-3796

DEPARTMENT OF TRANSPORTATION
FEDERAL AVIATION ADMINISTRATION
WASHINGTON, D.C. 20590

Flight Standards
Service

June 10, 1968

IN REPLY
REFER TO: FS-120

9188

Mr. A. J. W. Melson
Accident Investigation Division
Department of Transport
No. 3 Temporary Building
Ottawa 4, Ontario, Canada

CAIE
Acquired

Dear Mr. Melson:

This is in reply to your letter of May 23, 1968, your file reference 5002-3796(CAIE), requesting engineering reports on the accident to an FH1100 helicopter on March 14, 1968.

We have forwarded your letter to our Eastern Regional Office, since that office has cognizance over the engineering data files for Fairchild Hiller 1100 Helicopter. You will receive a direct reply shortly from that office

Sincerely yours,

N. N. Shapter
Chief, Airframe Branch
Engineering and Manufacturing Division

Document disclosed under the *Access to Information Act*
Document divulgué en vertu de la *Loi sur l'accès à l'information*

CA1
10/5

Document disclosed under the Access to Information Act
Document divulgué en vertu de la Loi sur l'accès à l'information

JUN 10 1969

Canadian Department of Transportation
Request for Fairchild Hiller 1100
Helicopter Reports

In reply
refer to: FS-120

Chief, Airframe Branch

Director, Eastern Region
Attention: Chief, Airframe & Equipment Section, EA-212

Please forward the reports requested in the attached letter if available, directly to the Canadian Department of Transportation. If not available, please advise them accordingly.

ORIGINAL SIGNED BY

N. N. Shapter, FS-120

Attachments

Document disclosed under the *Access to Information Act*
Document divulgué en vertu de la *Loi sur l'accès à l'information*

MEMORANDUM

CLASSIFICATION

TO / A: ADMA, OTTAWA
No. 3 Temporary Building.

YOUR FILE No. / Votre dossier: 5002-3796 (CAIO)

OUR FILE No. / Notre dossier: 5002-1 (AAV)

FROM / De: RDAS, VANCOUVER

DATE: June 3, 1968

FOLD

SUBJECT / Sujet: INFORMATION - HILLER FH-1100 AIRCRAFT ACCIDENTS

8062

CAIO P.A on File

1. With regard to your letter of May 23, 1968 concerning specific questions in respect of these helicopter accidents, we may have some questions once we know the circumstances and causes of these accidents.

2. We would appreciate receiving this information as soon as it becomes available.

P. M. Jenny
for Regional Director, Air Services

000178

Document disclosed under the *Access to Information Act*
Document divulgué en vertu de la *Loi sur l'accès à l'information*

Document disclosed under the *Access to Information Act*
Document divulgué en vertu de la *Loi sur l'accès à l'information*

MEMORANDUM

CLASSIFICATION

TO / A: ADMA, OTTAWA
No. 3 Temporary Bldg.

YOUR FILE No. / Votre dossier: 5002-3796
7772

OUR FILE No. / Notre dossier: 5002-715 (AAV)

FROM / De: RDAS, VANCOUVER

DATE: May 30, 1968

FOLD

SUBJECT / Sujet: ACCIDENT - Hiller FH-1100, CF-WMO

CAIE

1. Regarding your telex CAIE 34 requesting parts from the above helicopter to complete the breakup analysis, we are sending the following items:

(a) Battery disconnect No's. 44, 70, 95, 109, 153 and 261, and battery cable with connector lug attached.

(b) Right hand rudder pedal No. 21.

(c) Aluminium radio pan No. 47.

(d) Battery vent tube No. 59.

(e) Battery vent tube No. 262.

(f) Clear plexi glass No. 68.

(g) Overhead plexi glass No's. 96 and 161.

(h) Overhead plexi glass, grey, No. 106.

(i) Bubble plexi glass NO's. 184, 185, 187, 208.

(j) Clear plexi glass No. 202.

(k) Clear and grey plexi glass No. 214.

(l) Grey plexi glass No. 217.

(m) Orange and clear plexi glass No. 104.

. . . 2

CGSB—6GP22a PP&S Cat. No. 3591

Document disclosed under the *Access to Information Act*
Document divulgué en vertu de la *Loi sur l'accès à l'information*

CA1
10/5

Document disclosed under the *Access to Information Act*
Document divulgué en vertu de la *Loi sur l'accès à l'information*

2. Please advise as soon as possible if other parts may be required as we shall be releasing the wreckage to the owners in order to vacate the building where the wreckage is now stored.

3. All parts are to be returned to this office for disposal to the owners.

P. M. Young
for Regional Director, Air Services

c.c. Department of Transport,
Accident Investigation Division,
Engineering Laboratory,
Building U 62,
NRC Uplands, Ottawa.

Document disclosed under the *Access to Information Act*
Document divulgué en vertu de la *Loi sur l'accès à l'information*

DEPARTMENT OF TRANSPORT

MESSAGE FORM

FILE NO. 5002-3796(CAIE)

DATE May 24, 19 68

COMPLETE THIS SECTION FOR COMMERCIAL MESSAGES ONLY | CHARGE

R.D.A.S. VANCOUVER

CAIE 34 RE HILLER FH1100 CF-WMO. PLEASE FORWARD FOLLOWING ITEMS IF AVAILABLE:

FIRST, ALL BATTERY QUICK DISCONNECT ITEMS.

SECOND, ITEMS 21, 47, 59 AND 262.

THIRD, TEN PIECES ASSORTED SIZES PLEXI GLASS PREFERRABLY 68 OR 71; 96 OR 106; 99 OR 104; 100 OR 101; 112 OR 161; 184, 185 OR 190; 186 OR 187; 189 OR 208; 200 OR 202; 214, 217 OR 218.

BREAK-UP ANALYSIS NEARING COMPLETION BUT THESE ITEMS REQUIRED TO CHECK TERMINAL VELOCITY.

Phoned in 4:30 p.m

R. L. Chenevert.

DICAV

RML:MD

38-0014
9-63

FILE COPY

000183

Document disclosed under the *Access to Information Act*
Document divulgué en vertu de la *Loi sur l'accès à l'information*

WMJ/jds

R.D.A.S.
VANCOUVER

5002-3796(CAIO)
~~5002-3822~~
~~5002-3786~~

D.C.A.

May 23, 1968.

U.S. Accidents - Hiller FH-1100 Aircraft.

1. This is in reference to your request for information, concerning accidents to Hiller FH-1100 aircraft near Juneau, Alaska, on November 23, 1967, and in Texas in April, 1968.

2. The National Transportation Safety Board have advised that they will provide a report in respect of these accidents when their investigation has been completed.

3. Should you have specific questions in respect of these accidents, we would be pleased to correspond further with the National Transportation Safety Board.

ORIGINAL SIGNED BY
W. M. JOHNSON

W. M. Johnson,
for Director, Civil Aviation.

Document disclosed under the *Access to Information Act*
Document divulgué en vertu de la *Loi sur l'accès à l'information*

5002-3796(CAIE)

No. 3 Temporary Bldg.,
Ottawa 4, Ontario, Canada,
May 23, 1968.

Federal Aviation Administration,
800 Independent Avenue, S.W.,
Washington, D.C. 20553.

Dear Sirs:

In connection with the investigation into an accident to an FH1100 helicopter on March 14, 1968, we require engineering reports showing the strength and stiffness of the fin and tail rotor assembly. If load, stress, and/or structural test reports are available, would you please send us copies of these.

Yours truly,

Original Signed by
A. J. W. MELSON

(A.J.W. Melson)
for Chief, Accident Investigation Division.

AJWM:MD

000185

Document disclosed under the *Access to Information Act*
Document divulgué en vertu de la *Loi sur l'accès à l'information*

DEPARTMENT OF TRANSPORT

MESSAGE FORM

FILE NO. 5002-3796(CAIE)

DATE May 9, 19 68

COMPLETE THIS SECTION FOR COMMERCIAL MESSAGES ONLY | CHARGE

R.D.A.S. VANCOUVER

CAIE 30 RE HILLER FH-1100, CF-WMO. NO OBJECTION RELEASE SCATTER PLOT TO FAIRCHILD HILLER AS REQUESTED YOUR LETTER MAY 2, 1968.

R.L. Clemenhagen

DICAV

RML:MD

Phoned in 3:55 p.m

MD/AM

RL

38-0014
9-63

FILE COPY

000186

BROUWER & COMPANY

GENERAL INSURANCE ADJUSTERS LTD.

VANCOUVER
J. BROUWER
T. J. HANLY
D. R. MACFARLANE
G. L. CRAIG
J. F. BOREHAM
V. SMITH, A.I.I.C.
M. R. McCUBBIN, AIRCRAFT ENG.
G. J. DUNAWAY
J. M. HOEY
D. W. ELLIOTT
G. A. BARCLAY
H. E. COULTER
W. C. HAGGART
D. T. DOUGHTY
G. E. LEECH, APPRAISER
M. C. OSBORNE, OFFICE MGR.

FIRE AND PROPERTY DEPT.
R. A. McDONALD, A.I.I.C., MGR.

NEW WESTMINSTER
B. P. HANBY, A.I.I.C.
J. E. MORLEY
P. J. DAVIDSON
T. A. ROSS, A.I.I.C.
R. E. ROBSON
R. V. GLOVER

HOPE
J. A. MacDONALD

KELOWNA
D. S. McEWAN

VERNON
M. A. COE

KAMLOOPS
L. A. SOMERS
R. S. RING
G. H. NESBITT

QUESNEL
A. BROWN

TERRACE
P. PRINS

PRINCE RUPERT
H. A. UPSON

POWELL RIVER
R. M. KNUDSEN

VICTORIA
G. P. KITSON
A. W. FRASER
R. K. LITTLE
M. G. MOULD

FIRE AND PROPERTY DEPT.
R. J. GARLAND, ASSOCIATE
J. A. BELL

DUNCAN
J. K. BATESON
B. H. McCONNAN

NANAIMO
R. B. BOREHAM
H. P. McCALLUM

COURTENAY
F. L. MURRAY

CALGARY
J. P. KLEMP, F.I.I.C.
G. W. BJORNDAHL
D. E. CARR
W. G. EVANS
G. HARTLEY

EDMONTON
B. WADDINGHAM
M. O. LEE
G. BOURASSA

REGINA
C. M. PAGET
D. E. MORTIN

SASKATOON
T. F. QUINN

WINNIPEG
R. W. LANYON
R. K. TURNER
E. J. JURAS, APPRAISER

CABLE ADDRESS: "BROUWCO"

TELEPHONE: MUtual 3-2521

MAIN OFFICE
922 ROGERS BUILDING
470 GRANVILLE STREET

VANCOUVER 2, B. C.

May 3, 1968

Our File No. 44021-R

WITHOUT PREJUDICE

Assistant Deputy Minister, Air
Department of Transport
#3 Temporary Building
Ottawa, Ont.

Attention: Chief, Accident Investigation Division

Dear Sirs:

Re: Okanagan Helicopters Ltd.
Hiller FH-1100 Helicopter CF-WMO
Accident date - March 14, 1968

We are the Adjusters appointed by Underwriters to investigate the above captioned accident.

We would refer you to the letter addressed to Mr. Leyland dated March 25, 1968 and signed by R. G. Askin, Superintendant of Maintenance for Okanagan Helicopters Ltd. which pertains to disposition of the parts from this helicopter.

We acknowledge receipt of the request for authority to release parts to Fairchild Hiller which was relayed to us by telephone from your Vancouver office on May 2, 1968. In view of the serious aspect of this accident we must respectfully request that none of the parts be released to anyone other than Okanagan Helicopters Ltd.

We understand that your laboratory tests are now complete and we would request two copies of the laboratory report ond one copy of the advanced Summary Accident Report as soon as they become available.

We would have no objection to Fairchild Hiller personnel inspecting the parts which are presently held in your custody however we must request that any inspection carried out by anyone other than yourselves must be under the direct supervision of Accident Investigation Division.

Document disclosed under the *Access to Information Act*
Document divulgué en vertu de la *Loi sur l'accès à l'information*

CAF-1
2513

Document disclosed under the *Access to Information Act*
Document divulgué en vertu de la *Loi sur l'accès à l'information*

We trust you will understand the reason why it is necessary for us to make the above request.

Thanking you,

Yours very truly

BROUWER & COMPANY

Per: M. R. McCubbin
Aircraft Engineer
License VRM 367

MRMc/bm

cc: Regional Driector, Air Services
Attn: Supt. Accident Investigation

Okanagan Helicopters Ltd.
Attn: R. G. Askin

Document disclosed under the *Access to Information Act*
Document divulgué en vertu de la *Loi sur l'accès à l'information*

5002-3796

NATIONAL TRANSPORTATION SAFETY BOARD
DEPARTMENT OF TRANSPORTATION
WASHINGTON, D.C. 20591

May 2, 1968 4314

IN REPLY REFER TO: NE 514

Mr. W. M. Johnson
Civil Aviation Branch
Department of Transport
Ottawa, Ontario, Canada

Dear Mr. Johnson:

CAIO

Re: 5002-3796 (CAIO)
5002-3822
5002-3786

We have your letter of April 23 concerning accidents to Hiller FH-1100 aircraft - one near Juneau, Alaska, on November 23, 1967; the other in Texas in April, 1968.

Your inquiry is being held in our pending file and as soon as the completed report is received on each of these accidents, we will write you further.

Sincerely yours,

M. Jordan

Office of Executive Director
Accident Inquiry

Document disclosed under the *Access to Information Act*
Document divulgué en vertu de la *Loi sur l'accès à l'information*

Document disclosed under the *Access to Information Act*
Document divulgué en vertu de la *Loi sur l'accès à l'information*

MEMORANDUM

CLASSIFICATION

TO A: ADMA, OTTAWA
No. 3 Temporary Bldg.

YOUR FILE No. Votre dossier: 5002-3796

OUR FILE No. Notre dossier: 5002-715 (AAV) 4065

FROM De: RDAS, VANCOUVER

DATE: May 2, 1968

FOLD

SUBJECT Sujet: ACCIDENT - Hiller FH 1100, CF-WMO,
Approx.5 miles east of Fort Langley, B.C.
March 14, 1968.

1. We are forwarding one copy of the completed wreckage scatter plot to the Engineering Laboratory for their perusal and retention. Further copies will be submitted with the completed accident report.

2. Please advise if a copy of the scatter plot may be released, to Fairchild Hiller, by this office.

D. M. Young
for Regional Director, Air Services

c.c. Department of Transport,
Accident Investigation Division,
Engineering Laboratory,
Building U 62, N.R.C.,
Uplands, Ottawa, Ontario.
ATTN: R. M. Logan.

CGSB—6GP22a PP&S Cat. No. 3591

Document disclosed under the *Access to Information Act*
Document divulgué en vertu de la *Loi sur l'accès à l'information*

Document disclosed under the *Access to Information Act*
Document divulgué en vertu de la *Loi sur l'accès à l'information*

WMJ/JDS

5002-3796(CAIO)
~~5002-3822~~
~~5002-3786~~

OTTAWA, Ontario,
April 23, 1968.

AIR MAIL

Mr. B.R. Allen,
Director, Bureau of Aviation Safety,
Department of Transportation,
1825 Connecticut Avenue,
Washington, D.C. 20428,
U.S.A.

Dear Sir:

In connection with accidents to Hiller FH-1100 aircraft in Canada, it would be helpful if you could provide some information concerning accidents to that type of aircraft which occurred as follows:

(a) Livingston Helicopters, Juneau, Alaska, November 1967;

(b) Helicopter accident, Texas, U.S.A., April 1968.

Your assistance in this matter is appreciated.

Yours truly,

ORIGINAL SIGNED BY
W. M. JOHNSON

W. M. Johnson,
(for) Chief, Accident Investigation,
Civil Aviation Branch.

CC: RDAS Vancouver

Document released under the Act
Document divulgué en vertu de la Loi sur l'a

5002-3796

OTTAWA
AERADIO

MAY 3 18 52 68

ZCZC OHA049

JJ CYHQYY

031821 CYVRRO

ADMA OTTAWA

ATTN CAIE

AAV 28 REYRTEL CAIE 26 THE PORTION OF FRACTURED MAST IS NOT TO BE RELEASED TO FIARCHILD HILLER. OKANAGAN AND INSURANCE ADVISE LETTER TO FOLLOW RE PARTS.

RDAS VANCOUVER

CONFIRMATION COPY
Phoned to MD 1 - 6L

Document disclosed under the ... Act
Document divulgué en vertu de la Loi sur l'... formation

NNNN

5-62-5776

Caie

OTTAWA
AERADIO

MAY 3 15 56 68

ZCZC OHA018

JJ CYHQYY

031540 CYVRRO

ADMA OTTAWA

ATTN CAIE

AAV 27 RE YR CAIE 27 UNABLE TO PROVIDE MORE ACCURATE WIND SPEED AND DIRECTION FOR ACCIDENT LOCATION FROM FACTS AVAILABLE. HOWEVER PILOT REPORTS OBTAINED FOR AREA WITHIN 20 MINS AFTER ACCIDENT WOULD INDICATE WIND SPEED TO BE NEARER 20 TO 25 MPH AND FROM THE SCATTER DIAGRAM THE DIRECTION WOULD APPEAR TO BE 170 DEGS M.

RDAS VANCOUVER

~~DUPE~~

CONFIRMATION COPY
Phoned to MD by GL

000196

NNNN

Document disclosed under the *Access to Information Act*
Document divulgué en vertu de la *Loi sur l'accès à l'information*

DEPARTMENT OF TRANSPORT

MESSAGE FORM

FILE NO. 5002-3796(CAIE)

DATE May 2 1968

COMPLETE THIS SECTION FOR COMMERCIAL MESSAGES ONLY | CHARGE

R.D.A.S. VANCOUVER

CAIE 27 RE HILLER FH1100, CF-WMO. ASSUMING WIND FROM BETWEEN 150 DEGREES T AND 170 DEGREES T AT 17 MPH IT APPEARS MAIN ROTOR SEPARATED PRIOR TO TAIL ROTOR. SINCE WIND DIRECTION IS CRITICAL FACTOR IS IT POSSIBLE TO PROVIDE PERTINENT WIND DIRECTION AND SPEED WITH ANY GREATER DEGREE OF ACCURACY?

Phoned in 8:35
MD/GL

G. L. Chemiant
DICAV

RML:MD RL

38-0014
9-63

FILE COPY

000197

Document disclosed under the *Access to Information Act*
Document divulgué en vertu de la *Loi sur l'accès à l'information*

DEPARTMENT OF TRANSPORT

MESSAGE FORM

FILE NO. 5002-3796(CAIE)

DATE May 1, 1968

COMPLETE THIS SECTION FOR COMMERCIAL MESSAGES ONLY | CHARGE

R.D.A.S. VANCOUVER

CAIE 26 HAVE RECEIVED REQUEST FROM FAIRCHILD HILLER FOR FRACTURED MAST PORTION OF F1100 CF-WMO. OUR WORK IS COMPLETE ON THESE ITEMS. REQUEST YOU ASCERTAIN FROM OKANAGAN IF THEY ARE IN AGREEMENT; PLEASE ADVISE.

Phoned in 2:30 MD/AM

G.R. Chemineau.

DICAV

ANL:MD

38-0014
9-63

FILE COPY

000198

Document disclosed under the *Access to Information Act*
Document divulgué en vertu de la *Loi sur l'accès à l'information*

DEPARTMENT OF TRANSPORT

MESSAGE FORM

FILE NO. 5002-3796(CAIE)

DATE March 21, 19 68

COMPLETE THIS SECTION FOR COMMERCIAL MESSAGES ONLY | CHARGE

R.D.A.S. VANCOUVER

CAIE 5 RE YOUR AAV 196 ADVANCE FORWARDED AS REQUESTED. PLEASE ADVISE INSPECTOR LOGAN'S PROBABLE RETURN DATE AND IF ANOTHER ADVANCE NECESSARY. ALSO REQUEST REPORT ON PROGRESS.

Phoned in 12:30 p.m.
GL/MD

A.J.W. Mebs

DICAV

AJWM/MD

38-0014
9-63

FILE COPY

000199

Document disclosed under the *Access to Information Act*
Document divulgué en vertu de la *Loi sur l'accès à l'information*

DEPARTMENT OF TRANSPORT

MESSAGE FORM

FILE NO. 5002-3796(CAIE)

DATE March 15, 1968

COMPLETE THIS SECTION FOR COMMERCIAL MESSAGES ONLY | CHARGE

PA

R.D.A.S. VANCOUVER

ATTENTION: R.S.A.I.

CAIE 4 LOGAN ARRIVING AIR CANADA FLIGHT 401.

A.J.W. Milton

DICAV

Phoned in at 8:55 a.m.

AJWM/MD

38-0014
9-63

FILE COPY

000200

Document disclosed under the *Access to Information Act*
Document divulgué en vertu de la *Loi sur l'accès à l'information*

P.A → 5002-3.796

CF-WMO

OTTAWA
AERADIO

MAR 19 17 52 Z 68

ZCZC OHA040

JJ CYHQYY

191730 CYVRRO

ADMA OTTAWA

ATTN CAIE

AAV 196 PLS FORWARD ADVANCE FOR EXPENSES REQUESTED BY INSPECTOR LOGAN AS SOON AS POSSIBLE

RDAS VANCOUVER

Document disclosed under the *Access to Information Act*
Document divulgué en vertu de la *Loi sur l'accès à l'information*

DEPARTMENT OF TRANSPORT

MESSAGE FORM

FILE NO. 5002-3796(CAIE)

DATE April 11, 19 68

COMPLETE THIS SECTION FOR COMMERCIAL MESSAGES ONLY | CHARGE

R.D.A.S. VANCOUVER

CAIE 17 RE HILLER FH1100 CF-WMO. METALLURGICAL EXAMINATION CONFIRMS MAST FAILED WHILE ROTOR WAS UNDER POWER. OVERLOAD FRACTURE PRIMARILY TENSILE IN NATURE AS A RESULT OF EXCESSIVE ROTOR FLAP. HARDNESS TEST GAVE ROCKWELL C OF APPROXIMATELY 38. NEGATIVE RESULTS FROM INSTRUMENT EXAMINATION. EXAMINATION OF FIN AND WRECKAGE SCATTER PROGRESSING.

phoned at 4:10 p.m

DICAV

TWH:RML/md

Originated at 4:00 p.m.

38-0014
9-63

FILE COPY

000202

Document disclosed under the *Access to Information Act*
Document divulgué en vertu de la *Loi sur l'accès à l'information*

NNNN

PA- 5002-3796

CAIE
OTTAWA
AERADIO
APR 3 14 04 68

ZCZC OHA103

JJ CYHQYY

022127 CYVRRO

ADMA OTTAWA

ATTN CAIE

AAV 2 REF YR CAIE 10 COPY OF SCATTER PLAN SUPPLIED MR LOGAN WAS FOR HIS PERSONAL INFORMATION AND WAS NOT THE FINAL PLAN AND THEREFORE DOES NOT CONTAIN ALL NECESSARY CORRECTIONS. OMISSIONS AND ERRORS MENTIONED IN YOUR MESSAGE BEING INCORPORATED.

RDAS VANCOUVER

CONFIRMATION COPY
Phoned to MD by GL

Document disclosed under the *Access to Information Act*
Document divulgué en vertu de la *Loi sur l'accès à l'information*

MEMORANDUM

CLASSIFICATION

TO A: ADMA, OTTAWA
No. 3 Temporary Bldg.

YOUR FILE No. Votre dossier: 5002-3796

OUR FILE No. Notre dossier: 5002-715 (AAV)

FROM De: RDAS, VANCOUVER

DATE: March 28, 1968

FOLD

SUBJECT Sujet: ACCIDENT - Hiller FH 1100, CF-WMO
Approximately 5 miles east of Fort Langley, B.C.
March 14, 1968.

136

CAIB
AIB

1. We are sending parts from the above referenced aircraft which are to be held pending Inspector Logan's return to Ottawa.

2. All the parts removed from CF-WMO and sent to Ottawa are to be returned to this Region Office.

D. M. Young
for Regional Director, Air Services

c.c. D.O.T., Accident Investigation Division,
Engineering Laboratory,
Building U 62,
NRC Uplands, Ottawa.

CGSB—6GP22a PP&S Cat. No. 3591

Document disclosed under the *Access to Information Act*
Document divulgué en vertu de la *Loi sur l'accès à l'information*

Document disclosed under the *Access to Information Act*
Document divulgué en vertu de la *Loi sur l'accès à l'information*

DEPARTMENT OF TRANSPORT

MESSAGE FORM

FILE NO. 5002-3796(CAIE)

DATE April 1, 1968

COMPLETE THIS SECTION FOR COMMERCIAL MESSAGES ONLY | CHARGE

R.D.A.S. VANCOUVER

C.A.I.E. 10 RE ACCIDENT HILLER FH-1100, CF-WMO. CHECK ERRORS AND OMMISSIONS IN SCATTER DRAWING. ITEMS 40 AND 246 APPEAR TWICE. FOLLOWING ITEMS APPARENTLY MISSING - 72, 140, 142, 143, 144, 145, 181, 251 and 264.

Closed in 4:35 p.m

DICAV

CF/MD

RML:MD

38-0014
9-63

FILE COPY

000206

Document divulgué en vertu de la *Loi sur l'accès à l'information*

CAIE / ENG

OTTAWA
AERADIO

MAR 22 17 22 z68

ZCZC OHA025

JJ CYHQYY

221702 CYVRRO

ADMA OTTAWA

CYHQ ATTN CAIE

RJ64 Cook
49°19'N
121°39'W i.e. 10 mi SW of Hope

AAR 200 RE YOUR CAIE 5 INSPECTOR LOGAN ADVISES PROGRESS AS FOLLOWS ENGINE STRIP NOT COMPLETED BUT APPEARS TO BE NO INDICATION OF ENGINE TROUBLE STOP DETAILED EXAMINATION OF WRECKAGE ANTICIPATE COMPLETE BY MARCH 28TH STOP SIMILARITIES TO 206 FAILURE ARE LOCATION OF MAST SEPARATION FLAPPING MAIN ROTOR STRIKE ON FORWARD FUSELAGE AND UNDERCARRIAGE BROKEN TAIL ROTOR BLADES SAME FIRE DAMAGE STOP TECHNICAL REASON FOR FLAPPING NOT YET FOUND STOP WILL RETURN FIRST APRIL LATEST STOP REQUEST FURTHER ONE HUNDRED ADVANCE

RDAS VANCOUVER

CONFIRMATION COPY
Phoned to 1SD by GL

Document disclosed under the *Access to Information Act*
Document divulgué en vertu de la *Loi sur l'accès à l'information*

DEPARTMENT OF TRANSPORT

MESSAGE FORM

FILE NO. 5002-3796(CAIE)

DATE March 21, 19 68

COMPLETE THIS SECTION FOR COMMERCIAL MESSAGES ONLY | CHARGE

Copy 1

R.D.A.S. VANCOUVER

CAIE 5 RE YOUR AAV 196 ADVANCE FORWARDED AS REQUESTED. PLESE ADVISE INSPECTOR LOGAN'S PROBABLE RETURN DATE AND IF ANOTHER ADVANCE NECESSARY. ALSO REQUEST REPORT ON PROGRESS.

Phoned in 12:30 p.m
GL/MD

DICAV

AJWM/MD

38-0014
9-63

FILE COPY

000208

Document disclosed under the *Access to Information Act*
Document divulgué en vertu de la *Loi sur l'accès à l'information*

5002-3796

DEPARTMENT OF TRANSPORTATION
FEDERAL AVIATION ADMINISTRATION

EASTERN REGION
FEDERAL BUILDING
JOHN F. KENNEDY INTERNATIONAL AIRPORT
JAMAICA, NEW YORK 11430

DATE: JAN 17 1969

IN REPLY REFER TO: EA-216

29138

SUBJECT: Accident, Fairchild Hiller FH-1100, CF-WMO,
Approximately 5 miles East of Fort Langley, B.C., March 14, 1968

TO: Department of Transport
Air Services
Attention: Accident Investigation Division
No. 3 Temporary Building
Ottawa 4, Ontario
Canada

CAIE

In reference to your letter 5002-3796(CAIE) dated December 20, 1968, the following is provided:

1. The speed restriction to the FH-1100 was voluntarily imposed by Fairchild Hiller, not the Federal Aviation Administration. Their request for a reduction in V_{NE} was approved by Helicopter Flight Manual revision No. 6, dated April 25, 1968. The V_{NE} was again established at the original FAA approved limits by revision No. 7, dated June 12, 1968.

2. The Federal Aviation Administration did not participate in any flight tests.

3. Any data supplied by Fairchild Hiller Corporation to the FAA is considered Proprietary and cannot be released.

4. Mr. Harms of Fairchild Hiller, Helicopter Development Center, was contacted regarding your letter and was unaware of your request to them. He indicated he would supply any information you desired.

5. A request for this data should be directed to:

Fairchild Hiller Corporation
Helicopter Development Center
Attention: Mr. William Harms
Airworthiness Coordinator
Farmingdale, L.I., New York 11735

We trust this information will be of assistance to you.

W. F. Norton

W. F. NORTON
Chief, Engineering & Manufacturing Branch, EA-210

Document disclosed under the *Access to Information Act*
Document divulgué en vertu de la *Loi sur l'accès à l'information*

Document disclosed under the Access to Information Act
Document divulgué en vertu de la Loi sur l'accès à l'information

ACCIDENT FILE CONTROL

TO: A.I.G.

PILOT PAR FREDERICK RAYMOND FLETCHER

HAS HAD PREVIOUS ACCIDENTS AS FOLLOWS:

DATE(S)	(1) 15-03-66	(2)	(3)
FILE NUMBER(S)	(1) 5002-2963	(2)	(3)

CASUAL FACTORS

(1) ① Pilot-failed to observe objects
② Pilot-operating carelessly

(2)

(3)

TO: RECORDS

FROM: A.I.G.

THE FOLLOWING INFORMATION IS TO APPEAR ON THE FILE COVER:

AIRCRAFT REGISTRATION	DATE OF ACCIDENT	FILE NUMBER
CF-WMO	14-3-68	5002-3796

AIRCRAFT MAKE AND MODEL: Hiller FH 1100

LOCATION OF ACCIDENT: nr. Fort Langley, B.C.

☑ FORWARD TO F.P.O.

PLEASE PLACE PHOTOCOPY OF THIS TELETYPE NO. AAV 195

ON FILES INDICATED BELOW AND TAKE ACTION AS INDICATED.

	FILE NUMBER	ACTION REQUIRED
☑	5008- WMO	P.A.
☑	5258- 32	NAME OF COMMERCIAL OPERATOR: Okanagan Helicopters Ltd. FORWARD TO SOI
☑	5802- 17529	NAME OF PILOT AND LICENCE NO. C-5872 PAR FREDERICK RAYMOND FLETCHER 1. FORWARD TO ~~S.R.L.~~ CARL, PILOT LICENSING 2. FORWARD TO A.D.D. FOR DELETION FROM MAILING LIST.

23-0020

FOR AIG

000211

5008-WMO
5258-322
5802-17529

OTTAWA AERADIO

MAR 15 18 21 68

ZCZC OHA030

JJ CYHQYY

37725

151750 CYVRRO

ADMA OTTAWA

ATTENTION CAI

AAV 195. AIRCRAFT ACCIDENT REPORT.

A HILLER FH-1100 CHARLIE FOXTROT DASH WHISKY MIKE OSCAR.

B OKANAGAN HELICOPTERS LTD VANCOUVER BC.

C PAR FREDERICK RAYMOND FLETCHER C/O OKANAGAN HELICOPTERS LTD VANCOUVER BC.

D MARCH 14TH 1968 APPROX 1145 PST.

E VANCOUVER BC TO RUBY CREEK BC.

F APPROX 5 MILES EAST OF FORT LANGLEY BC.

G1 ONE

G2 NONE

H AIRCRAFT DISINTEGRATED IN FLIGHT CRASHED AND BURNED. FERRY FLIGHT. LEYLAND YOUNG AND JOBLING INVESTIGATING.

RDAS VANCOUVER

~~DUPE~~

Entered for Accident Book MM

Statistics Checked MM
Pilot-Accident 15-566

Entered on Accident Cards
MAR 15 1968

000212

Document disclosed under the Access to Information Act
Document divulgué en vertu de la Loi sur l'accès à l'information

FILE NO. 5002 - 3796 H 3034 VOLUME NO. 1

VOL. 1

5002 - 3796

DEPARTMENT OF TRANSPORT

FROM MARCH 15, 1968
TO

IMPORTANT — NOTIFY RECORDS WHEN FILE IS PASSED DIRECT TO ANOTHER SECTION

SUBJECT AIRCRAFT
SUB-SUBJECT ACCIDENTS - GENERAL
FILE TITLE CF - WMO - HILLER FH 1100 - NEAR FORT LANGLEY, B.C.
14 - 3 - 68

(1) DATE LEFT RECORDS	(2) PURPOSE FOR WHICH REFERRED (IF PURPOSE FOR WHICH REFERRED CANNOT BE EXPRESSED IN ONE LINE ADD MEMO TO FILE AND ENTER HERE "WITH MEMO")	(3) REFER FILE TO	(4) ENTER DATE TO BRING FORWARD WHEN REQUIRED	(5) USER'S INITIAL TO SHOW ACTION COMPLETED
	MAR 20 1968 AAV 195	AOME	~~3 days 1968~~	Mack.
MAR 25 1968	Reg Mr Milson	CAIE (2)		ML
MAY 10 1968	4314	CAIE (1)		ML
	7772	CAIE		RL
	4065 and 4215	CAIE		RL
	Minute 12/6/68	CAIE		LL
	9188	CAIE/ENG		LL
	9548	CAIO		A
	letter 3-5-68 apparently unanswered 4219	CAIE		LL
	AAV 48	CAIE		LL
	13443	CAIE	~~22 Aug 1968~~ MB	LL
AUG 1 1968	AUG 2 1968 DF 3-7-68	AOME Duplicate	1 OCT 68 MB	Mack.
AUG 20 1968	20793 & 15421	CAIE/ENG (2)		RL
OCT 25 1968	NOV 18 1968 20793 ~~3796~~	CAIE (2)		LL
OCT 17 1968	Mr Grace	AGPP (2)		VG
	Min 21/10 - letter 18/10	C.A.I.E. (2)		RL
		~~AGPP 2~~		
OCT 25 1968	Mr Grace Min 22/10 & 8 - letter 18/10	AGPP (1)		VG
NOV 18 1968	DF 22-8-68	CAIE	~~7 Jan 69~~ DW	LL
	DF 1-10-68	AOME	~~20 days 69~~ DW	Mack
DEC 18 1968	Reg Mr Lecheminant	CAIE		LL
JAN - 6 1969	BF 7-1-69	CAIE	~~29 Jan~~ DW	LL
JAN 16 1969	Reg Mr Lecheminant	CAIE		LL
	29135	CAIE	~~29 Jan~~ DW	LL
JAN 27 1969	BF 20-1-69	AOME	~~1 April 69~~	Mack
JAN 29 1969	BF 24-1-69	CAIE		LL
	BF 29-1-69	CAIE		LL
	Memo 27-1-69	CAIE	~~19 Feb~~	LL

000213

Document disclosed under the Access to Information
Document divulgué en vertu de la Loi sur l'accès à l'informat

THIS COVER MUST NOT BE FOLDED UNDER FILE

CORRESPONDENCE TRANSFER AND CROSS-INDEX

SUBJECT	FILE NUMBER	INITIALS

NEW FILE COVER OPENED BY_____

CHECKED BY_____

IMPORTANT

1.—Records is established to serve you, and satisfactory service is largely dependent upon your prompt return of this file. This file is charged to your Division or Section and you are responsible for its return unless you notify Records to transfer the charge to another Section, otherwise the file remains charged to you until it is returned.

2.—Instructions for use of file cover—

Column 1—Records enters the date on which the file is routed to the user.

2—Shows the reason for the routing.

3—Shows where it is routed and enables the user to indicate additional routing.

4—Provides for the user to bring forward the file at a later date, if necessary.

5—Provides space for the user to initial the entry when action is completed.

3.—Letters, memoranda, telegrams should not be removed from the file except in emergency. In that case Records should be notified by phone if possible, or a minute indicating disposition of the referenced material should be entered in Column 2 of the file cover, beside the reference. The file should be referred to Records so that the records may be amended.

000214

Document disclosed under the Access to Information
Document divulgué en vertu de la Loi sur l'accès à l'information

FILE NO. 5002 - 3796 VOLUME NO.

VOL. 1 - 5002 - 3796

DEPARTMENT OF TRANSPORT

FROM MAR. 15, 1968
TO July 11, 1969

IMPORTANT — NOTIFY RECORDS WHEN FILE IS PASSED DIRECT TO ANOTHER SECTION

SUBJECT AIRCRAFT
SUB-SUBJECT ACCIDENTS - GENERAL
FILE TITLE CF - WMO - HILLER FH 1100 - NEAR FORT LANGLEY, B.C. - 14 - 3 - 68

DORMANT

(1) DATE LEFT RECORDS	(2) PURPOSE FOR WHICH REFERRED (IF PURPOSE FOR WHICH REFERRED CANNOT BE EXPRESSED IN ONE LINE ADD MEMO TO FILE AND ENTER HERE "WITH MEMO")	(3) REFER FILE TO	(4) ENTER DATE TO BRING FORWARD WHEN REQUIRED	(5) USER'S INITIAL TO SHOW ACTION COMPLETED
FEB 17 1969	C.F. 19-2-69	CAIE/ENG.		RR
	Letter from Pacific 13/2/68	CAIE/ENG		RR
	Letter dated 21 Feb/69	CAIE		RR
	Mr. Manning Bunn	CAIE		RR
	Letter Manning Bunn	CAIE		RR
	Telex 29-4-69	CAIE (2)		a.j.w.w.
	As Requested	CAIO		L
AUG 21 1969	Latendresse (Requested)	CAIO (1)		L
	13636	CAIO		A
	re recommendation # 12 of report	CAIO-1	15 Aug 69	A
1969	for tech paragraphs please SEE -5	CAIE (2)		a.j.w.w.
	Requested	CAER (1)		D.F.
SEP - 3 1969	BF 1/4/69	AOME (1)		Jan/6
SEP - 5 1969	Mr. Logan	CAIE		RR
	BF 15/4/69	CAIO		HOA
	19139	CAIO		HOA
	27030	CAIE		a.j.w.w.
JAN 20 1970	31031	CAIO (1)		Qs
FEB 19 1970	Memo Jan 19/70 From CAIE	CAE (2)		GL
		CAIE (3)		GL
	DVA2 33045	CAIO		HOA
	DVA2 32144	CAIO (2)		HOA
	DVA2 34925	CAIO		HOA
	Mr. Le Chevrant	CAIE (1)		GL

DORMANT

DORMANT

DORMANT

000215

Document divulgué en vertu de la *Loi sur l'accès à l'information*

THIS COVER MUST NOT BE FOLDED UNDER FILE

CORRESPONDENCE TRANSFER AND CROSS-INDEX

SUBJECT	FILE NUMBER	INITIALS

NEW FILE COVER OPENED BY_____

CHECKED BY_____

IMPORTANT

1.—Records is established to serve you, and satisfactory service is largely dependent upon your prompt return of this file. This file is charged to your Division or Section and you are responsible for its return unless you notify Records to transfer the charge to another Section, otherwise the file remains charged to you until it is returned.

2.—Instructions for use of file cover—

Column 1—Records enters the date on which the file is routed to the user.

2—Shows the reason for the routing.

3—Shows where it is routed and enables the user to indicate additional routing.

4—Provides for the user to bring forward the file at a later date, if necessary.

5—Provides space for the user to initial the entry when action is completed.

3.—Letters, memoranda, telegrams should not be removed from the file except in emergency. In that case Records should be notified by phone if possible, or a minute indicating disposition of the referenced material should be

000216