Document disclosed under the *Access to Information Act*
Document divulgué en vertu de la *Loi sur l'accès à l'information*

FILE NO. 5002 - 715 VOLUME NO. 1

VOL. 1 5002 - 715

DEPARTMENT OF TRANSPORT

FROM
TO Mar 31/69

IMPORTANT — NOTIFY RECORDS WHEN FILE IS PASSED DIRECT TO ANOTHER SECTION

SUBJECT AIRCRAFT

SUB-SUBJECT ACCIDENTS - GENERAL

FILE TITLE CF-WMO FAIRCHILD HILLER FH-1100 PAR F.R. FLETCHER APPR OX 3 MI. N. OF THE FREEWAY NEAR JACKI NOU RD. AL DERGROVE

(1) DATE LEFT RECORDS	(2) PURPOSE FOR WHICH REFERRED (IF PURPOSE FOR WHICH REFERRED CANNOT BE EXPRESSED IN ONE LINE ADD MEMO TO FILE AND ENTER HERE "WITH MEMO")	(3) REFER FILE TO	(4) ENTER DATE TO BRING FORWARD WHEN REQUIRED	(5) USER'S INITIAL TO SHOW ACTION COMPLETED
MAR 14 1968	Newfoundland	AA		MDM
Mar 21/68	12411	AA		MDM
Mar 26/68	12624	AA		
April 3/68	14178			
April 11/68	15328			
April 16/68	15935			
May 30/68	23986			
June 19/68	26166			
June 21/68	29099			
July 15/68	33228			
Oct 9/68	45462			
Oct 28/68	46919			
Oct 28/68	46955			
MAY 24/69	24817			
Mar 27/69	13438			MDM

DEPARTMENT

02-0001

Document disclosed under the *Access to Information Act*
Document divulgué en vertu de la *Loi sur l'accès à l'information*

THIS COVER MUST NOT BE FOLDED UNDER FILE

CORRESPONDENCE TRANSFER AND CROSS-INDEX

SUBJECT	FILE NUMBER	INITIALS

NEW FILE COVER OPENED BY_____

CHECKED BY_____

IMPORTANT

1.—Records is established to serve you, and satisfactory service is largely dependent upon your prompt return of this file. This file is charged to your Division or Section and you are responsible for its return unless you notify Records to transfer the charge to another Section, otherwise the file remains charged to you until it is returned.

2.—Instructions for use of file cover—

Column 1—Records enters the date on which the file is routed to the user.

2—Shows the reason for the routing.

3—Shows where it is routed and enables the user to indicate additional routing.

4—Provides for the user to bring forward the file at a later date, if necessary.

5—Provides space for the user to initial the entry when action is completed.

3.—Letters, memoranda, telegrams should not be removed from the file except in emergency. In that case Records should be notified by phone if possible, or a minute indicating disposition of the referenced material should be entered in Column 2 of the file cover, beside the reference. The file should be referred to Records so that the records may be amended.

000256

Document disclosed under the *Access to Information Act*
Document divulgué en vertu de la *Loi sur l'accès à l'information*

CANADA

DATED FROM..... FILE No.....

TO..... VOLUME No.....

CLOSED VOLUME

DO NOT PLACE ANY CORRESPONDENCE ON THIS FILE

FOR SUBSEQUENT CORRESPONDENCE SEE:

FILE No..... VOLUME No.....

PLEASE KEEP ATTACHED TO TOP OF FILE

CGSB 6-GP-31A PP&S CAT. No. 3607

Document disclosed under the *Access to Information Act*
Document divulgué en vertu de la *Loi sur l'accès à l'information*

DEPARTMENT OF TRANSPORT

MESSAGE FORM

FILE NO. 5002-715

DATE MARCH 16, 1970 19

COMPLETE THIS SECTION FOR COMMERCIAL MESSAGES ONLY | CHARGE

C A I E, OTTAWA

PCAI 210 REF HELICOPTER ACCIDENT HILLER FH 1100 CHARLIE FOXTROT DASH WHISKEY MIKE OSCAR AND OUR TELECON REGARDING HYDRAULIC ACTUATORS. LATERAL CYCLIC POWER CYLINDER S/N T-601. LONGITUDINAL CYCLIC POWER CYLINDER S/N T-525. COLLECTIVE POWER CYLINDER S/N X-159. TEST REPORT WITH NUMBERS WAS ALSO ATTACHED TO ACCIDENT REPORT AS APPENDIX 13.

for P C A I VANCOUVER

TY/mim

38-0014
9-63

FILE COPY

000258

Document disclosed under the *Access to Information Act*
Document divulgué en vertu de la *Loi sur l'accès à l'information*

CANADIAN HELICOPTER OVERHAULS LIMITED

Vancouver International Airport, B.C., Canada • Tel.: 273-4496 • Telex: 04-5283

May 23, 1969

24817



Mr. T. Young,
Accident Investigation Dept.,
Department of Transport,
Civil Aviation Branch,
739 West Hastings Street,
Vancouver 1, B. C.

Dear Tom:

As per our recent conversation, please find enclosed the dates you required on the flapping angles as checked under our company memo #43.

Hope this information is satisfactory.

Yours truly,

CANADIAN HELICOPTER
OVERHAULS LIMITED

Dave

D. McLean
Supt., Maintenance

DMcL/nlm

Document disclosed under the *Access to Information Act*
Document divulgué en vertu de la *Loi sur l'accès à l'information*

Document disclosed under the Access to Information Act
Document divulgué en vertu de la Loi sur l'accès à l'information

APPENDIX 22

Registration	Purchased	OKH Bulletin #43	OKH Bulletin #54	OKH Bulletin #70
OKR	Jan. 6/68	June 6/68 605:30 hours 10° each blade	June 6/68 605:30 hours	July 20/68 859:45 hours
WMF	Jan. 15/68	May 27/68 133:00 hours 18 1/2°	June 15/68 195:20 hours	July 25/68 325:05 hours
WMG	Jan. 15/68	May 16/68 185:15 hours 19° stop to stop	June 6/68 220:55 hours	July 15/68 313:00 hours
WMH	Jan. 15/68	Jan. 7/69 177:40 hours	June 7/68 220:55 hours	Jan. 7/69 177:40 hours
WMJ	Jan. 15/68	May 18/68 114:15 hours 20°	June 7/68 161:00 hours	Aug. 7/68 242:35 hours
WMK	Jan. 15/68	May 17/68 63:05 hours 17.8°	June 23/68 125:35 hours	Aug. 7/68 168:45 hours
WML	Jan. 15/68	May 20/68 107:50 hours 18°	June 17/68 152:15 hours	July 23/68 247:15 hours
WMM	Jan. 15/68	June 2/68 123:20 hours 18°	June 8/68 135:00 hours	Oct. 31/68 560:00 hours
WMN	Jan. 15/68	May 18/68 207:25 hours 15°	June 21/68 307:25 hours	July 12/68 374:10 hours
WMO	Jan. 15/68			

NOTE: The original S.B. FH1100-62-1 was issued June 17/68 and received in this office June 25/68 and was sent out the same day.

Okanagan Bulletin #54 is the same as S.B. FH1100-51-3

Okanagan Bulletin #70 is the same as S.B. FH1100-62-1

Document disclosed under the *Access to Information Act*
Document divulgué en vertu de la *Loi sur l'accès à l'information*

MEMORANDUM

CAI

CLASSIFICATION

TO / A: P.C.A.I. Vancouver
(Attention: Mr. T.M. Yound)

AIR SERVICES REGISTRY
VANCOUVER
MAR 27 1969
File

YOUR FILE No. / Votre dossier: 5002-715(AAV)

OUR FILE No. / Notre dossier: 5002-3796(CAIE)

FROM / De: C.A.I. Ottawa

DATE: March 26, 1969.

FOLD

SUBJECT / Sujet: Accident: Hiller FH1100, CF-WMO
March 14, 1968

13438

1. Enclosed are copies of correspondence from this accident file for your information.

A.J.W. Melson
for Chief, Accident Investigation Division

Encl.

000262

Document disclosed under the *Access to Information Act*
Document divulgué en vertu de la *Loi sur l'accès à l'information*

CAI
14/3/68

Document disclosed under the *Access to Information Act*
Document divulgué en vertu de la *Loi sur l'accès à l'information*

5002-3796(CAIE)

No. 3 Temporary Bldg.,
Ottawa 4, Ontario,
October 17, 1968.

R.J. Landry Associates Ltd.,
242 City Centre,
880 Wellington Street,
Ottawa 3, Ontario.

Dear Mr. Landry:

Re: Accident, Hiller FH1100, CF-EMO,
Approximately 5 Miles East of
Fort Langley, B.C. - March 14, 1968.

Many thanks for the copy of Revision 6 of the FH1100 Flight Manual and for the copy of the message from Mr. John E. Burke.

The message says that "a concentrated analytical and flight test program" was started. Since the temporary speed restriction has been lifted, we assume that this program has been done.

Could you please send us the results of the program which was undertaken.

Yours truly,

Original Signed by
A. J. W. MELSON
(A.J.W. Melson)
for Chief, Accident Investigation Division.

AJWM:MD

Document disclosed under the *Access to Information Act*
Document divulgué en vertu de la *Loi sur l'accès à l'information*

5002-3796(CAIE)

No. 3 Temporary Building,
Ottawa 4, Ontario, Canada,
December 20, 1968.

Federal Aviation Administration,
Eastern Region,
John F. Kennedy International Airport,
Federal Building,
Jamaica, New York, 11430.

Dear Sirs:

Re: Accident, Hiller FH1100, CF-WMO,
Approximately 5 Miles East of
Fort Langley, B.C., March 14, 1968

We understand that, as a result of the above accident, the Fairchild Hiller Corporation carried out a concentrated analytical and flight test program to determine if a combination of environmental disturbance, overspeed and control technique could cause a safety of flight situation. Pending results of this program, the operators were advised to observe an airspeed limitation of 110 mph. at all times, and to avoid abrupt control movements when flying in turbulence.

Since the temporary speed restriction has been lifted, we assume that this program has been done. Two months ago we requested the Fairchild Hiller Corporation to send us the results of the program which was undertaken. They replied that this information was available from your office.

Could you please send us the results of the program which was undertaken. Please include all the available data on the effects of the extended stabilizer.

Yours truly,

Original Signed by
A. J. W. MELSON

(A.J.W. Melson)
for Chief, Accident Investigation Division.

AJWM:MD

Document disclosed under the *Access to Information Act*
Document divulgué en vertu de la *Loi sur l'accès à l'information*

5002-3796

DEPARTMENT OF TRANSPORTATION
FEDERAL AVIATION ADMINISTRATION

EASTERN REGION
FEDERAL BUILDING
JOHN F. KENNEDY INTERNATIONAL AIRPORT
JAMAICA, NEW YORK 11430

DATE: JAN 17 1969

IN REPLY REFER TO: EA-216

29138

SUBJECT: Accident, Fairchild Hiller FH-1100, CF-WMO,
Approximately 5 miles East of Fort Langley, B.C., March 14, 1968

TO: Department of Transport
Air Services
Attention: Accident Investigation Division
No. 3 Temporary Building
Ottawa 4, Ontario
Canada

CAIE

In reference to your letter 5002-3796(CAIE) dated December 20, 1968, the following is provided:

1. The speed restriction to the FH-1100 was voluntarily imposed by Fairchild Hiller, not the Federal Aviation Administration. Their request for a reduction in V_{NE} was approved by Helicopter Flight Manual revision No. 6, dated April 25, 1968. The V_{NE} was again established at the original FAA approved limits by revision No. 7, dated June 12, 1968.

2. The Federal Aviation Administration did not participate in any flight tests.

3. Any data supplied by Fairchild Hiller Corporation to the FAA is considered Proprietary and cannot be released.

4. Mr. Harms of Fairchild Hiller, Helicopter Development Center, was contacted regarding your letter and was unaware of your request to them. He indicated he would supply any information you desired.

5. A request for this data should be directed to:

Fairchild Hiller Corporation
Helicopter Development Center
Attention: Mr. William Harms
Airworthiness Coordinator
Farmingdale, L.I., New York 11735

We trust this information will be of assistance to you.

W. F. Norton

W. F. NORTON
Chief, Engineering & Manufacturing Branch, EA-210

Document disclosed under the *Access to Information Act*
Document divulgué en vertu de la *Loi sur l'accès à l'information*

5002-3796(CAIE)

C.A.I.E.,
No. 3 Temporary Bldg.,
Ottawa 4, Ontario,
January 24, 1969.

R.J. Landry Associates Ltd.,
242 City Centre,
880 Wellington Street,
Ottawa 3, Ontario.

Attention: Mr. E.G. Crosby

Dear Mr. Crosby:

Re: Accident, Hiller FH1100, CF-WMO,
Approximately 5 Miles East of
Fort Langley, B.C., March 14, 1968

Subsequent to our letter of October 17, 1968, in which information was requested regarding the results of a flight test program carried out on the FH1100 helicopter, I spoke to Mr. Landry on the telephone. He told me that the Fairchild Hiller Corporation had said that this information was available from the F.A.A. We sent a letter to the F.A.A. requesting the same information (copy enclosed) and received a letter from them yesterday (copy enclosed).

Would you please contact Mr. William Harms for the information required.

Yours truly,

Original Signed by
A.J.W. MELSON

(A.J.W. Melson)
for Chief, Accident Investigation Division.

Enclosure

AJWM/MD

Document disclosed under the *Access to Information Act*
Document divulgué en vertu de la *Loi sur l'accès à l'information*

Manning, Bruce, Macdonald & Macintosh

Barristers & Solicitors

H. E. Manning, Q.C.
Maxwell Bruce, Q.C.
Alastair R. Paterson, Q.C.
Peter H. H. Ridout, Q.C.
Peter Brooke Bell
Eric M. Lane
Ian C. C. Balfour
Peter R. Hylton
Bradley J. Chapman

H. F. Kimber, Q.C.
A. B. Whitelaw, Q.C.
R. D. Poupore, Q.C.
George W. Edmonds, Q.C.
N. W. R. Boyes
H. D. Wilkins
Charles E. Evans
John D. Hylton
J. M. Banfill

85 Richmond Street West
Toronto 1, Canada

Telephone (416) 362-6041

Cable Addresses "Mantor"
Telex 02-21375 "Macdon"

January 27, 1969

A. N. LeCheminant, Esq.,
Chief, Accident Investigation,
Department of Transport,
No. 3 Temporary Building,
Ottawa 4, Ontario.

Dear Sir,

re: Okanagan Helicopters Ltd.
Accident: March 14, 1968, Langley, B.C.
Aircraft: Hiller FH-1100 CF-WMO

I know that Jack Melson is presently working on this problem and you will recall that we discussed it very briefly when I was in Ottawa.

I have just now had made available to me Fairchild Hiller Bulletins 51-3 and 62-1. It may be that you already have copies of the bulletins in your file but if not they may be of assistance to you.

It has occurred to me that there may be some connection between the speed limitation imposed on these machines, the installation of stabilizers extensions, the inspection and correction to proper manufacturer's specifications of the teetering stops, and the lifting of the air speed restriction on the aircraft with the extended stabilizers without adequate testing to ensure acceptable stability at all permissible speeds. If, as a theory, this seems to be completely off-base to you, perhaps you would be so kind as to tell me so.

Yours truly,
MANNING, BRUCE, MACDONALD & MACINTOSH

per:

EML:ml
Encs.

Document disclosed under the *Access to Information Act*
Document divulgué en vertu de la *Loi sur l'accès à l'information*

5002-3796(CAIE)

C.A.I.E.,
No. 3 Temporary Building,
Ottawa 4, Ontario,
January 31, 1969.

Manning, Bruce, Macdonald & Macintosh,
Barristers & Solicitors,
85 Richmond Street West,
Toronto 1, Ontario.

ATTENTION: E.M. Lane

Dear Mr. Lane:

Re: Accident, Hiller FH1100, CF-WMO,
Approximately 5 Miles East of
Fort Langley, British Columbia,
March 14, 1968.

In reply to your letter of January 27, 1969, regarding the Fairchild Hiller Bulletins 51-3 and 62-1, we are also trying to obtain information that might establish a connection between these bulletins and the lifting of the speed limitation.

If we receive significant data that is not proprietary, it will be forwarded to you promptly.

Thank you for the copies of the bulletins mentioned in paragraph 1.

Yours truly,

Original Signed by
A. N. Le CHEMINANT

(A.N. le Cheminant)
for Chief, Accident Investigation Division.

AJWM/MD

Document disclosed under the *Access to Information Act*
Document divulgué en vertu de la *Loi sur l'accès à l'information*

5002-3796(CAIE)

C.A.I.E.,
No. 3 Temporary Building,
Ottawa 4, Ontario, Canada,
February 21, 1969.

Fairchild Hiller Corporation,
Helicopter Development Centre,
Farmingdale, L.I.,
New York 11735, U.S.A.

Attention: Mr. William Harms,
Airworthiness Coordinator

Dear Mr. Harms:

Re: Accident, Hiller FH1100, CF-WMO,
Approximately 5 Miles East of FortLangley
British Columbia, March 14, 1968.

We understand that the Fairchild Hiller Corporation carried out a concentrated analytical and flight test program to determine if a combination of environmental disturbance, overspeed and control technique could cause a safety of flight situation. Pending results of this program, the operators were advised to observe an airspeed limitation of 110 mph at all times, and to avoid abrupt control movements when flying in turbulence.

Since the temporary speed restriction has been lifted, we assume that this program has been done. Would you please send us the results of this program, including the effects of the extended stabilizer.

We have previously requested this information from the Fairchild Hiller representative in Ottawa. They replied that this information was available from the FAA. A letter to the FAA requesting this information brought the reply, (copy enclosed), that you would supply any information that we desired.

If your report is not available, could you please supply the following engineering data:

1. M_u - pitching moment coefficient due to forward velocity.
   L_v - rolling moment coefficient due to side velocity.
   $M\alpha$ - pitching moment coefficient due to angle of attack.
   M_q - pitch damping coefficient due to pitch angular rate.

   } *

* For normal, extended, and modified stabilizer (with trim tab).

.....2

Document disclosed under the *Access to Information Act*
Document divulgué en vertu de la *Loi sur l'accès à l'information*

2. Aircraft moments of inertia, I_X, I_Y, I_Z (maximum and minimum values, slug ft.^{2}).

3. h_r - height of rotor hub above helicopter C.G. (maximum and minimum).

4. Curve of longitudinal cyclic position with speed for normal, extended, and modified stabilizer with trim tab. This is required for level flight.

Yours truly,

Original Signed by
A. J. W. MELSON

(A.J.W. Melson)
for Chief, Accident Investigation Division.

Enclosure

AJWM/MD

500-B716
Document disclosed under the Access to Information Act
Document divulgué en vertu de la Loi sur l'accès à l'information

NATIONAL AERONAUTICAL ESTABLISHMENT
ÉTABLISSEMENT AÉRONAUTIQUE NATIONAL

CABLE ADDRESS "RESEARCH"
ADRESSE TÉLÉGRAPHIQUE

PLEASE QUOTE FILE No. M49-10-3
No DE DOSSIER À RAPPELER

NATIONAL RESEARCH COUNCIL OF CANADA
CONSEIL NATIONAL DE RECHERCHES DU CANADA

OTTAWA 7.

February 27, 1969

Mr. A. N. LeCheminant,
Accident Investigation Division,
Department of Transport,
Ottawa, Ontario.

Dear Chem:

Re: Water Tunnel Terrain Model Tests

Enclosed are three photographs of the flow visualization over the model terrain. The dye plumes are released at ground level, tree top level and 600 ft. above the trees. The horizontal scale is slightly greater than the model scale, i.e. 1 in. = 923 ft. as opposed to 1 in. = 100 ft. for the model. The vertical scale is 1 in. = 462 ft. The crash site is 3-1/2 in. or about 300 ft. from the downstream end of the model.

As you are already aware, our effort to identify any unusual flow phenomena resulting from local topographical effects has been inconclusive except that we are able to produce the turbulent boundary layer effects that one would expect over a rough surface. It is unlikely that any further attempts using this modelling technique would be rewarding and I think it would be fair to say that this conclusion would apply to using the same approach at a larger scale in a wind tunnel. Perhaps we should discuss whether or not you would like us to undertake further measurements.

Yours truly,

R. L. Wardlaw

Enc.

Document disclosed under the *Access to Information Act*
Document divulgué en vertu de la *Loi sur l'accès à l'information*

FAIRCHILD HILLER
AIRCRAFT DIVISION

March 19, 1969
Refer: LD-J-119

Department of Transport
C.A.I.E.
No. 3 Temporary Building
Ottawa 4, Ontario, Canada

Attention: Mr. A. J. W. Melson

Reference: Your letter, 5002-3796 (CAIE)
dtd. February 21, 1969
Accident, Hiller FH1100, CF-WMO
Approximately 5 miles east of Fort Langley
British Columbia, March 14, 1968

Dear Mr. Melson:

Your letter to Mr. William Harms, Airworthy Coordinator, Fairchild Hiller Corporation, concerning the above cited accident, has been referred to my office for response.

This is to advise that your request is being coordinated with the various affected departments within our Corporation and I will be in touch with you again within the next two weeks.

Very truly yours,

FAIRCHILD HILLER CORPORATION
Aircraft Division

Reese I. Joye, Jr.

Reese I. Joye, Jr.
Chief Counsel and
Director of Contracts and Programs

lm

Document [redacted] mation Act
Document divulgué [redacted] ur l'accès à l'information

[redacted]
Department of Transport,
Accident Investigation Division,
Engineering Laboratory,
Building U 62,
NRC Uplands Ottawa
ATTENTION J. Melson

5002-715 (AAV)

Dec.13,1968

RDAS, PACIFIC

ACCIDENT - Hiller FH-1100, CF-WMO

1. The following information has been obtained in answer to your questions regarding the above aircraft:

(a) We have not received the data covering the flight tests which were conducted for Fairchild Hiller Corporation on FH-1100 helicopters. This information will be forwarded when we receive same.

(b) Helicopter CF-WMO had the extended horizontal stabilizer installed at the time of the accident.

(c) Attached is a copy of Service Bulletin FH-1100 - 62 - 1 Removal of Stabilizer Extensions and a telex message from Fairchild Hiller to Okanagan Helicopters.

(d) Attached is a copy of Service Bulletin FH-1100 - 51 - 3 Inspection and Rework of Teetering Stops. Prior to the original issue of this SB, there was no requirement to check the teetering angles.

2. Operators have informed us that FH-1100 helicopters were operated on skid gear with the extended stabilizer because they would fly faster with less power due to the fuselage remaining in a more horizontal attitude in cruise.

3. We have a reported case of a pilot flying in cruise condition at about 120 MPH, and as he wanted to make a fast letdown into a mountain valley he lowered the collective control quite rapidly to go into autorotation. The helicopter immediately pitched nose down about 20-30° with a rapid buildup of speed. His recovery was effected by leaving the cyclic control in the position it had been and pulling on collective pitch. The helicopter recovered from the dive and the pilot then made a slow descent.

4. We will forward any other pertinent information as we receive it. If you have any other questions or require further information on the above please advise us.

J. M. Young
for Regional Director, Air Services

ENCLaim

000274

Document disclosed under the *Access to Information Act*
Document divulgué en vertu de la *Loi sur l'accès à l'information*

CF-WMO

M
CN TELS VCR TL⊙
ROTORS VCR

CNT NO CK
P DCTL FA HAGERSTOWN MD APRIL 12/68 445P EST
OKANAGAN HELICOPTERS, ATTN R G ASKIN
VANCOUVER BC
A CONCENTRATED ANALYTICAL AND FLIGHT TEST PROGRAM ON THE FH-1100 IS UNDERWAY TO DETERMINE IF A COMBINATION OF ENVIRONMENTAL DISTRUBANCE OVERSPEED AND CONTROL TECHNIQUE CAN CAUSE A SAFETY OF FLIGHT SITUATION PENDING RESULTS OF THIS PROGRAM OPERATORS ARE ADVISED TO 1. TEMPORARILY OBSERVE AN AIRSPEED LIMITATION OF NO MORE THAN 110 MPH AT ALL TIMES 2. AVOID ANY ABRUPT CONTROL MOVEMENTS WHEN FLYING IN TURBULENCE
FIARCHILD HILLER J E BURKE

FH-1100 1. 110 2.
220P PST

CN TELS VCR TL⊙
ROTORS VCR

Filed/Phoned St. Q. St. Rosemarine 14:00 hrs
16/4/68 re the above

Okanagan Helicopters

Document disclosed under the *Access to Information Act*
Document divulgué en vertu de la *Loi sur l'accès à l'information*

Questions for Pacific Region

FH 1100 Accident

- What were the results of the additional flight tests done after the accident when max. speed was reduced from 127 mph to 110 mph?
- How did these tests result in the old max. speed being restored?
- What is the significance of the extended horizontal stabilizer?
- Did the helicopter which crashed have an extended stabilizer?
- How important is it to hold the flapping angle of the rotor blade to close limits on either side of the neutral position?
- is extended stabilizer now prohibited when floats are not used?

We understand that many operators were flying with the extended stabilizer because they could fly faster, in spite of the fact that the manual says that it is needed only when floats are installed.

Also the flap angles at one time were not closely maintained. That the nominal 10° on either side could be 9° to 11°, 8°-12°, or other values. But now the angles have become more important and 10°-10° settings are maintained.

Our present conclusions are that the blades flapped excessively because the helicopter entered a gust at too high a speed.

New conclusions may incorporate the extended stabilizer as a causal factor.

Jr. Mebon
CAIE

Document divulgué en vertu de la Loi sur l'accès à l'information

Fairchild Hiller

Rod — RJS
Dave — Dmer
Frank — FR
Keith — K.R.
Stu — SKS

ROTORS VCR

FAIRHILL HAG B

TLX PD HAGERSTOWN MD 5/29/68
MR GLEN MCPHERSON
OKANAGAN HELICOPTERS
VANCOUVER BC

CONCERNING THR STATUS OF THE COMPANY SPONSORED FH-1100 ACCIDENT INVESTIGATION THE FOLLOWING MAY BE REPORTED.

1. OVER THE PAST MONTH FAIRCHILD HILLER CORP HAS CONDUCTED AND IS CONTINUING EXTENSIVE FLIGHT TESTING AND ANALYTICAL INVESTIGATION INTO POSSIBLE COMBINATIONS OF FLIGHT MODES AND ENVIRONMENTAL CONDITIONS WHICH COULD LEAD TO A FLIGHT SAFETY SITUATION IN THE FH-1100
2. THESE TESTS AND STUDIES ARE NOT YET COMPLETE BUT SO FAR RESULTS INDICATE THE MOST CRITICAL FLIGHT CONDITION IN THE FH-1100 IS THE TRANSIENT MODE BETWEEN FORWARD FLIGHT AND AUTOROTATION IN TURBULENT ENVIRONMENTAL CONDITIONS.
3. TO IMPROVE THE MARGIN OF SAFETY IN THIS FLIGHT MDE TWO FILED SERVICE BULLETINS PLUS A FLIGHT MANUAL REVISION WILL BE ISSUED DURING THE NEXT THIRTY DAYS. BULLETIN NO. 51-3 WILL CALL FOR EACH OPERATOR TO INSPECT AND INSURE THAT MAIN ROTOR TEETER STOPS ARE PER FH-1100 SPEC. BULLETIN NO,Z. 62-1 WILL CALL FOR A MODIFICATION TO THE HORIZONTAL STABILIZER.
4. COMPLIANCE WITH THE TWO SERVICE BULLETINS PLUS FAA APPROVAL OF THE FLIGHT MANUAL REVISION SHOULD RESULT IN EVENTUAL REMOVAL OF THE SELF-IMPOSED SPEED RESTRICTION.
5. IN THE INTERIM OPERATORS ARE URGED TO A.OBSERVE THE EXISTING VNE RESTRICTION B. AVOID ABRUPT CONTROL MOVEMENTS AND C. APPORACH THE TRANSIENT MODE BETWEEN FORWARD FLIGHT AND AUTOROTATION WITH CAUTION

FAIRCHILD HILLER
B S DAVIS
DIRECTOR OF SERVICE

ROTORS VCR

FAIRHILL HAG B

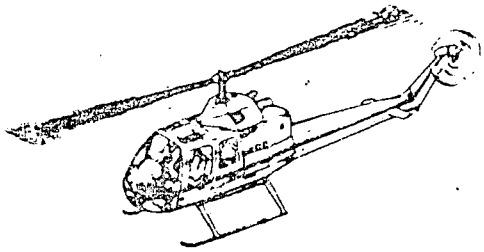

FH-1100

Service Bulletin

MAIN ROTOR ASSEMBLY

INSPECTION AND REWORK OF TEETERING STOPS P/N 24-51423-1 & -13; & P/N 24-51441-21, -23 & -25

1. PLANNING INFORMATION.

A. Effectivity.

Model	Manufacturer's Serial Numbers
FH-1100	10, 12 through 14, 16 through 24, 26 through 29, 31 through 52, 54 through 72, 74 through 84, 86 through 97, 101, 108, 111, 112, 114 through 116, 118 and 120.

Aircraft MSN 9, 11, 15, 25, 30, 53, 73, 85, 98 through 100, 102 through 107, 109, 110, 113, 117, 119, 121 and subsequent will have this modification incorporated prior to delivery.

B. Reason. To inspect and insure the proper manufacturer's specification of the teeter angular dimension.

C. Description. The contents of this bulletin describe the inspection and rework, if necessary, to the teetering stops to assure that the main rotor head has the specified angular movement.

D. Compliance. Within the next 25 hours of flight or two weeks whichever occurs first and concurrently with any replacement of main rotor hub and/or teeter stops on FH-1100 helicopters.

Document divulgué en vertu de la Loi sur l'accès à l'information

E. Approval.

Engineering C. Dimmick

Airworthiness H. Hockett

Service J.E. Burke

F. Manpower. Approximately five (5) man-hours required for inspection and rework.
(a) Inspection - 1 man-hour
(b) Rework - 4 man-hours

G. Material Cost and Availability. No kits involved. Material to be furnished by operator.

H. Tooling. None.

I. Weight and Balance. The weight and balance change resulting from this modification is negligible.

J. Reference. FH-1100 Service Manual
FH-1100 Parts Catalog

2. ACCOMPLISHMENT INSTRUCTIONS.

NOTE: The following instructions are Fairchild Hiller recommended procedures for accomplishing the inspection and rework contained in this bulletin. Deviations from this procedure are permissible, provided the full intent of the bulletin is accomplished.

A. Inspection.

(1) Ascertain that the teetering stops (24-51423-1 or -13 or 24-51441-21, -23 or -25) are properly installed by insuring that the stops are against the inside radius of the hub. (Figure 1) If a gap exists between the stop and hub, loosen bolts and push stop outboard. Retighten bolts.

(2) Pull the tip of one blade downward until contact is made between the stop and the rotor mast. Hold blade in this position.

(3) Measure the angle of the rotor mast with a propeller protractor. Measure the angle of the lower surface of the rotor hub. The difference between the two readings should allow a teetering angle of 10° (+30' -0').

Document divulgué en vertu de la Loi sur l'accès à l'information

(4) Repeat steps (2) and (3) for the opposite blade.

(5) If the inspection performed does not allow a teetering angle to fall within the prescribed limits: If under remove the teetering stops (24-51423-1 or -13 or 24-51441-21, -23 or -25) from the rotor hub and rework per Part B. If over, replace stop(s) and proceed in accordance with paragraph 2.A.

CAUTION: Blade ends should be supported when teetering stops are removed.

B. Rework.

(1) Position teetering stop in a vise. Using a three-inch diameter drum sander installed in a hand drill or drill press, sand the area of the stop that contacts the rotor shaft. Remove as little material as necessary to increase the angle of teeter. Maintain same profile on stop surface being reworked. See Figure 1. Exercise caution not to remove material in excess of tolerance.

(2) Install teetering stop and repeat step (2) and (3) of Section A.

(3) Repeat steps (1) and (2) of Section B as often as necessary to produce the required teetering angle for both stops.

(4) When all rework is completed, remove all sharp edges in rework area by maintaining a .06-.07 radius. Penetrant inspect per MIL-I-25135.

(5) Anodic coat per MIL-C-5541A, Grade B, Type I (brush application) rework area of stops.

(6) Zinc Chromate two coats (MIL-P-8585).

(7) Finish with two coats of silver lacquer (TT-L-32).

(8) Color match mark hub and teeter stop using same code as for balancing, i.e., paint blue and/or yellow stripes 1/4'' wide on hub and stops to match blade markings. (See Figure 1.)

Document divulgué en vertu de la Loi sur l'accès à l'information

C. Re-installation.

(1) Install teeter stops against the lower side of the rotor hub assembly with four (4) bolts (AN6-11A), four (4) washers (AN960-PD416) and four (4) nuts (MS20365-624A).

(2) Ascertain that the back of the stop is against the inside radius of rotor hub. (Figure 1.)

(3) Torque bolts to 160-190 pound-inches .

(4) Repeat angular dimension inspection in accordance with paragraph 2.A.

(5) After compliance, make entry in aircraft log, and fill out the attached sheet and forward to Service Manager, Fairchild Hiller Corporation, Aircraft Division, Hagerstown, Maryland 21740.

(6) Note at bottom of page 51-3 of FH-1100 Service Manual - "Refer to S.B. FH-1100-51-3 for Main Rotor Hub and/or Teeter Stop Replacement."

3. MATERIAL INFORMATION.

*MIL-P-8585	A/R	Zinc Chromate
*TT-L-32	A/R	Silver Lacquer
*MIL-C-5541A	A/R	Brush-On Anodize

*Operator furnished.

Document disclosed under the Access to Information Act
Document divulgué en vertu de la *Loi sur l'accès à l'information*

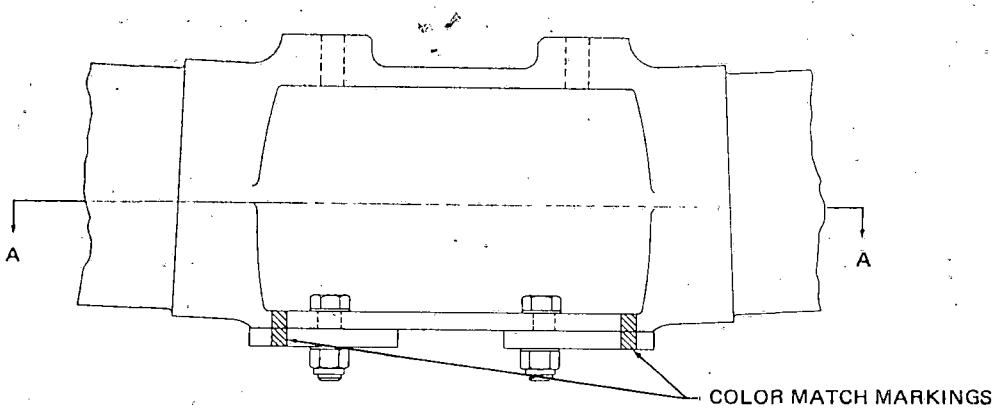

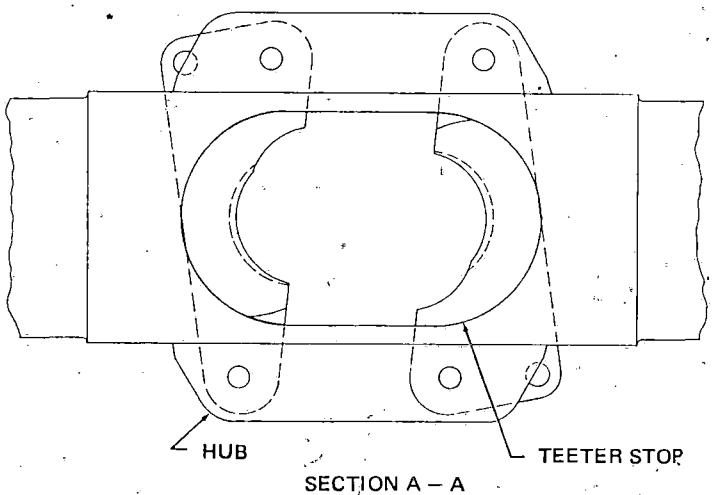

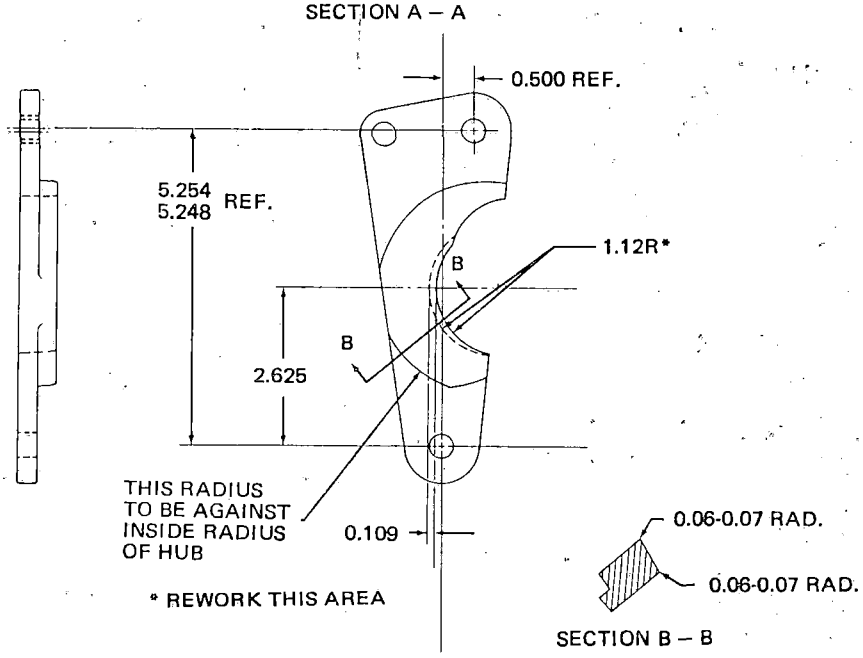

Figure 1

Document divulgué en vertu de la Loi sur l'accès à l'information
Document released under the Access to Information Act

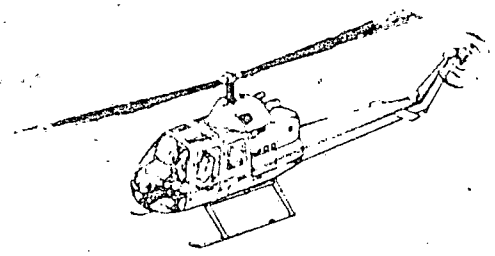

FH-1100

Service Bulletin

TAIL BOOM

REMOVAL OF STABILIZER EXTENSIONS

1. PLANNING INFORMATION.

A. Effectivity.

Model	Manufacturer's Serial Numbers
FH-1100	All aircraft which have extended stabilizers installed and which are operating without inflatable floats.

Aircraft MSN 25, 30, 48, 55, 73, 98 through 106, 109, 110, 117, 121, 122, 124 through 129, 131, 135 and 137 and subsequent will have this modification incorporated prior to delivery if inflatable floats are not specified per Sales Order.

B. Reason. To improve body stability of non-float equipped FH-1100 Helicopters when entering autorotation.

C. Description. The presently installed extended stabilizer is to be reworked to remove the right and left extensions, to install modified fairings, and to stow the position light wiring.

D. Compliance. Within 25 flight hours or two weeks from receipt of kits, whichever occurs first.

E. Approval.

Engineering A. Bonnell

Airworthiness H. Hoelett

Service G Burke

F. Manpower. Approximately 5.0 man-hours per aircraft.

Document disclosed under the Access to Information Act
Document divulgué en vertu de la Loi sur l'accès à l'information

G. Material Cost and Availability. Kit, P/N SBK-FH1100-62-1A, -62-1C, -62-1B containing the necessary parts to accomplish this modification will be shipped to operators free of charge.

H. Tooling. None.

I. Weight and Balance.

Weight Change	-3.5 pounds
Horizontal Arm	+279.5 inches
Horizontal Moment	-978 pound-inches

J. Reference. FH-1100 Service Manual
FH-1100 Parts Catalog
FH-1100 Flight Manual

2. ACCOMPLISHMENT INSTRUCTIONS.

NOTE: The following instructions are Fairchild Hiller recommended procedures for accomplishing the changes contained in this bulletin. Deviations from the procedures herein contained are permissible, provided the full intent of the modification is accomplished.

PART A. REWORK INSTRUCTIONS.

A. Remove right and left horizontal stabilizer tips. Remove the 12 clips (SL201-5AA11) used as attachment hardware of the tip to stabilizer and retain.

B. Disconnect wires from position lights on stabilizer.

C. Remove screws and washers attaching stabilizer extensions to stabilizer and remove extensions.

NOTE: Pull the wiring through the extension trailing edge only and bundle for re-attachment at the stabilizer trailing edge.

D. Install the 12 clips (SL201-5AA11) removed in Step A. in their original position on the horizontal stabilizer. Right and left sides. Reference Figure No. 1.

E. Remove screws, blocks and nuts securing the fairings and gaskets. Remove fairings and gaskets, right and left side.

Document divulgué en vertu de la Loi sur l'accès à l'information

F. Install new horizontal stabilizer fairings with gaskets on tail boom. Bond gaskets to fairings with Pliobond adhesive or equivalent.

NOTE: Fairings, P/N 24-62000-915 and -916, must be drilled in accordance with instructions in Figure No. 2 and 3.

G. Bond two wedge shaped blocks (24-62000-195) to each stabilizer fairing at the aft fairing-to-stabilizer attach bolt location (one block on top side of fairing and one on bottom side). Use Pliobond adhesive or equivalent.

H. Drill .190 - .196 inch diameter holes through fairings and blocks to match four existing holes in horizontal stabilizer. Spotface blocks to 9/16 inch diameter.

I. Secure horizontal stabilizer to fairings.

J. Position stabilizer tips to horizontal stabilizer.

K. Position the two wire leads, (from stabilizer trailing edge) to the tip position light, and tape and stow excess wire.

NOTE: The excess amount of lead, approximately one foot, to be retained to allow for reinstallation of extended stabilizer in event a float installation is desired.

L. Install stabilizer tips utilizing same hardware from removal.

M. Install screws (AN5158R4), 24 places, in shur-loc nuts left open by extension removal. Notch tip assembly as necessary to clear above screw heads.

N. With power on aircraft, check operation of position lights.

O. After compliance, make appropriate entry in aircraft log and fill out the attached sheet and forward to Service Manager, Fairchild Hiller Corporation, Aircraft Division, Hagerstown, Maryland 21740.

3. MATERIAL INFORMATION.

The following parts and material are required to accomplish this modification and can be obtained as a kit:

New Part No.	Qty.	Key Word	Old Part No.	Disposition
24-62000-229, -230 Kit A.	2	Fairings (A/C 60 and sub.)	-310, -309	Retain for use in float installation.
24-62000-315, -316 Kit B.	2	Fairings (A/C 60 and sub.)	-313, -314	Retain for use in float installation.
	2	Stabilizer Extension	24-62037-1	
24-62000-915, -916 Kit C.	2	Fairings (A/C 9 thru 59)	-313, -314	Retain for use in float installation.
	24	Washer	AN960-8	Operator's Option
**Pliobond or Equivalent	A/R	Adhesive		
24-62000-85	2	Gasket		
24-62000-195	4	Block		
MIL-L-23053A	A/R	Tubing, Vinyl Heat Shrinkable 1/4" I.D.		
*24-83051	2	Gasket		
*24-83084-3	2	Support Assembly		
*AN507-440R8	4	Screw		
*AN515-4R8	2	Screw		
*AN525-10R7	18	Screw		
*AN525-10R16	2	Screw		
*AN960PD4L	6	Washer		
*AN960-8L	12	Washer		
*AN960-PD10L	2	Washer		
*MS27039-0805	12	Screw		
*NAS623-3-31	2	Screw		
*MS21042L04	6	Nut		
**AN5158R4	24	Screw	MS27039-0804	Operator's Option

*Existing parts to be reused.

** Operator furnished.

Document disclosed under the Access to Information Act
Document divulgué en vertu de la Loi sur l'accès à l'information

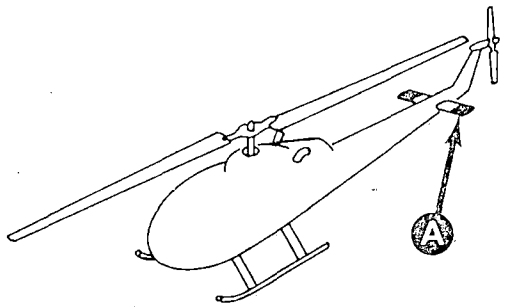

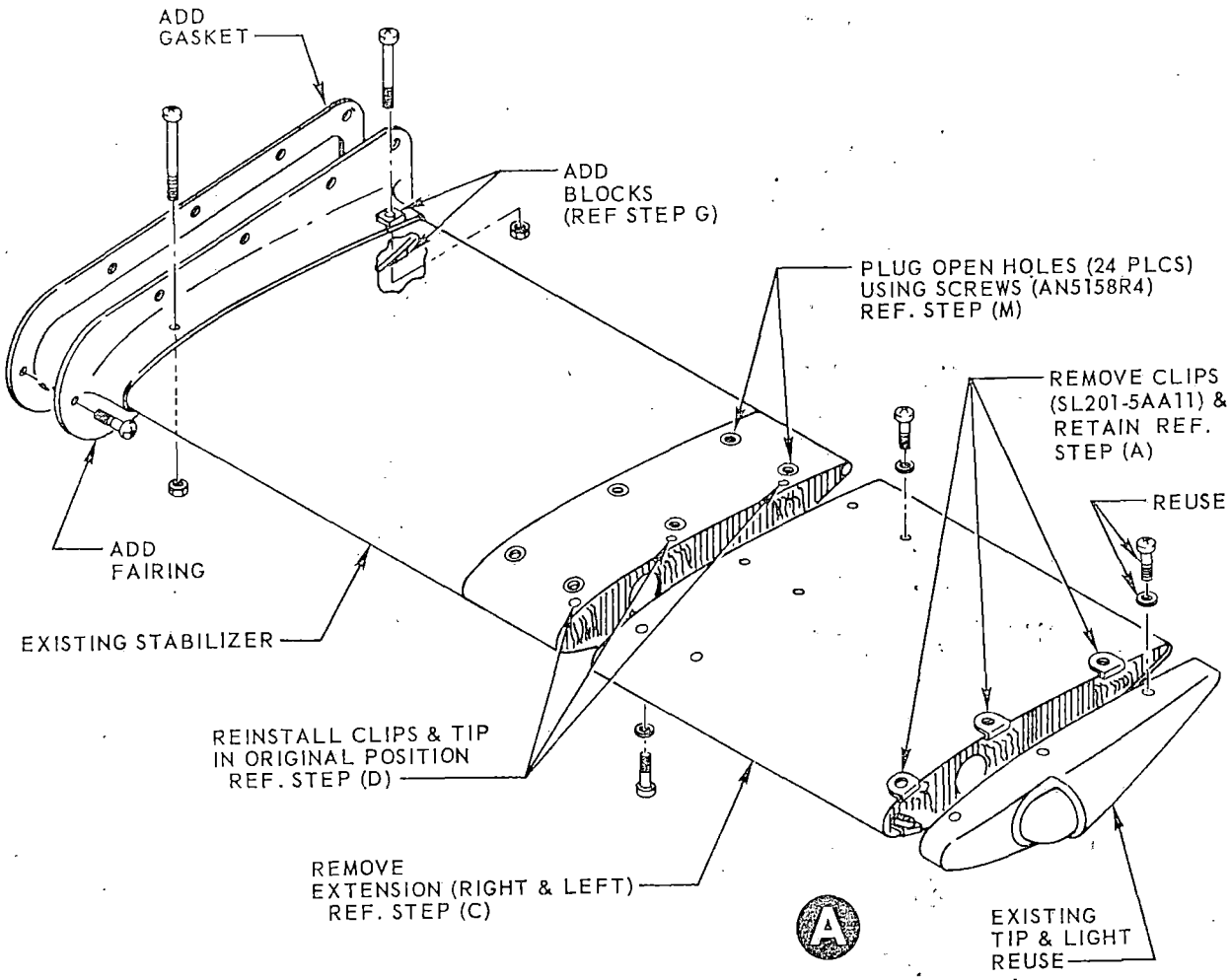

Figure 1

Document divulgué en vertu de la *Loi sur l'accès à l'information*

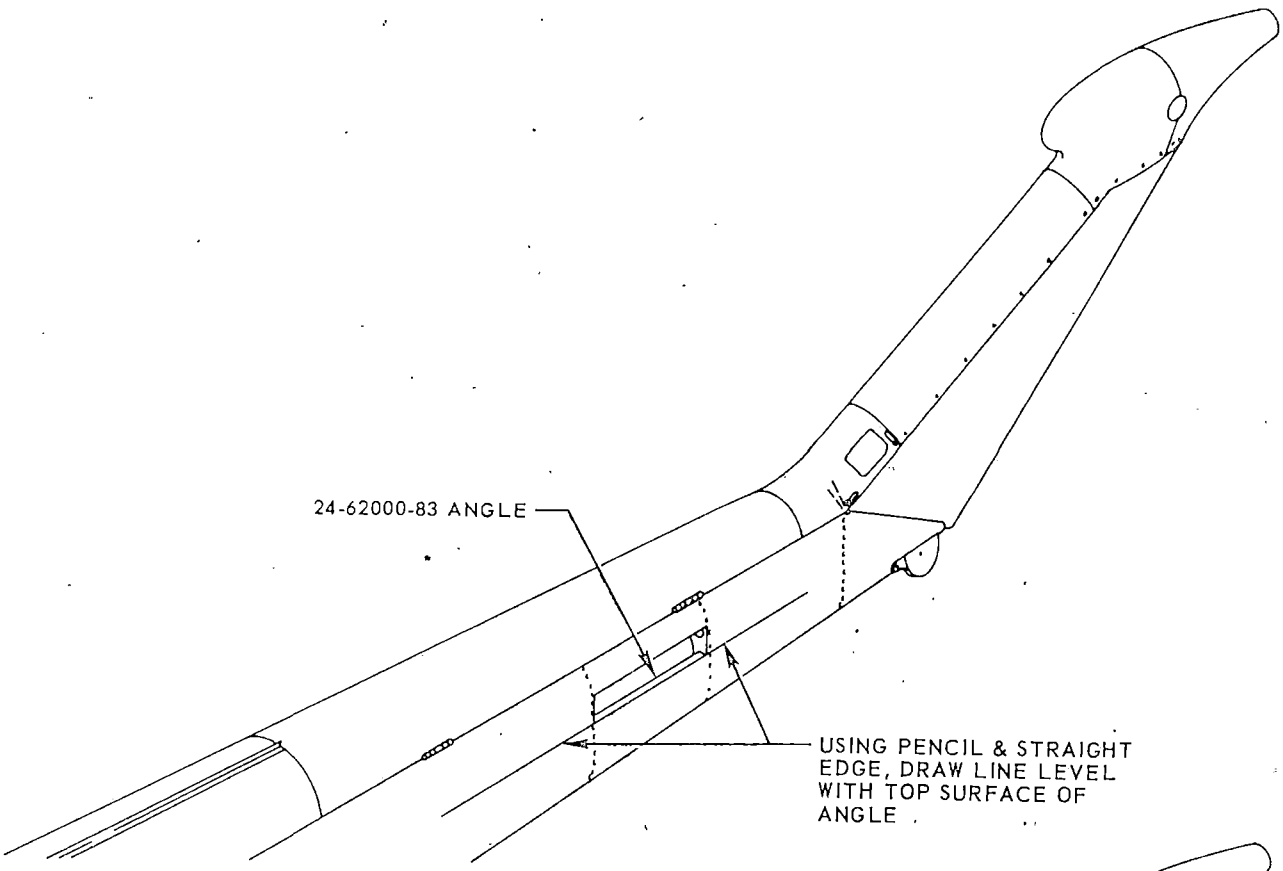

Figure 2

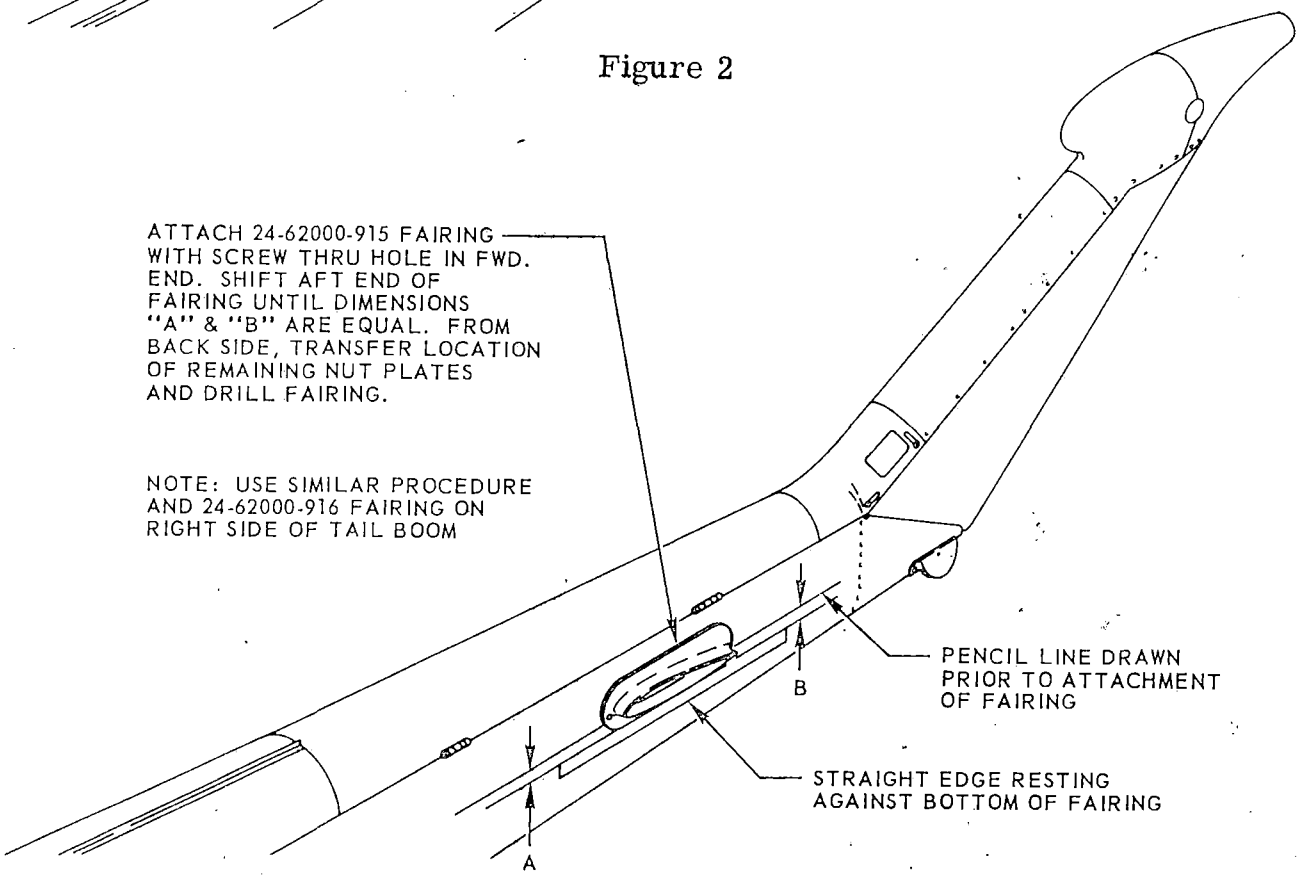

Figure 3

Document disclosed under the *Access to Information Act*
Document divulgué en vertu de la *Loi sur l'accès à l'information*

NNNN

1959 APR 29 PM 1:30

Z

CZC VRA125 1959 62241

JJ CYVRRO

291909 CYHQ

PCAI VANCOUVER

CAIE 19 RE CF/WMO REGRET LAW OFFICE HAS ADVISED US THAT PROPRIETARY DATA CANNOT BE USED FOR INVESTIGATION BUT SHUD BE RETURNED STOP

CAI OTTAWA

Complete with what we have

Document disclosed under the Access to Information Act
Document divulgué en vertu de la Loi sur l'accès à l'information

DEPARTMENT OF TRANSPORT

MESSAGE FORM

FILE NO: 5002-715

DATE April 28, 1969 19

COMPLETE THIS SECTION FOR COMMERCIAL MESSAGES ONLY	CHARGE

C.A.I.E., OTTAWA

PCAI 17 REUR CAIE 18 CF-WMD PLS FORWARD COPY OF REQUESTED FLIGHT TEST DATA TO ENABLE US TO COMPLETE OUR ACCIDENT REPORT.

C. Leyland.

[redacted] PCAI VANCOUVER

CL/mlm

38-0014
9-63

FILE COPY

Document disclosed under the Access to Information A
Document divulgué en vertu de la Loi sur l'accès à l'informatio

6A1

NNNNZCZC VRA092 1941 231

JJ CYVRRO

281918 CYHQ

PCAI VANCOUVER

1969 APR 28 PM 1:09

CAIE 18 RE CF/WMO YOUR REF 5002/715/PCAI/ AND LETTER
DATED 13 DEC 68 PARA A. PLEASE DISCONTINUE ATTEMPTS TO
OBTAIN FLIGHT TEST DATA. SEND YOUR ACCIDENT REPORT AND ALL
AVAILABLE INFORMATION TO HQS SOON AS POSSIBLE FOR COMPLETION
OF INVESTIGATION

CAI OTTAWA

6L

Document disclosed under the *Access to Information Act*
Document divulgué en vertu de la *Loi sur l'accès à l'information*

FAIRCHILD HILLER
AIRCRAFT DIVISION

April 23, 1969
Refer: LD-J-187

19349

AIR SERVICES REGISTRY
VANCOUVER
APR 25 1969
File 5002-715

Department of Transport
Air Services - Accident Investigation
739 West Hastings Street
Vancouver, 1, B.C. Canada

Attention: Mr. Tom Young

FILE FOLDER

Reference: Your letter dated
March 26, 1969

Dear Sir:

Mr. A. J. W. Melson of your Ottawa office has been in frequent contact with this office concerning the flight and analytical tests which were performed on the FH-1100 helicopter by Progressive Aviation last year. The results of these tests were consolidated into reports, copies of which have been sent to Mr. Melson. He has advised there was no need to send duplicate copies to you.

Very truly yours,

FAIRCHILD HILLER CORPORATION
Aircraft Division

Reese I. Joye, Jr.

Reese I. Joye, Jr.
Chief Counsel

lm

Document disclosed under the *Access to Information Act*
Document divulgué en vertu de la *Loi sur l'accès à l'information*

APPENDIX 13

MASTER INSTRUMENTS LTD.
VANCOUVER INTERNATIONAL AIRPORT
BRITISH COLUMBIA, CANADA

Telephone:
278-6131
AREA CODE 604
TELEX No. 04-50300

April 15, 1968

15935

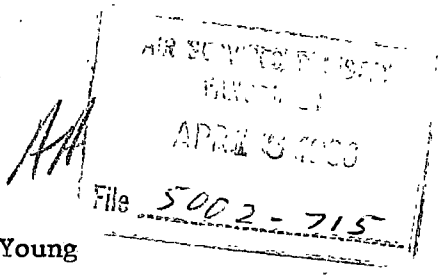

Department of Transport Aviation Division
Accident Investigation Branch
739 West Hastings Street
Vancouver, B. C.

Attention: Mr. Tom Young

Dear Sir:

Functional tests were completed in our shop on April 10, 1968 on the following hydraulic units and observed by Mr. Tom Young

The tests were completed according to the Manufacturer's Specifications.

COLLECTIVE
Power Cylinder, Part No. 9710, Serial No. S159:

Internal Leakage Test	Neutral	8 cc/min.
" " "	Extended	Negligible
" " "	Retracted	Negligible

Pilot valve force - normal.

LONGITUDINAL
Power Cylinder, Part No. 9720, Serial No. T525:

Internal Leakage Test	Neutral	20 cc/min.
" " "	Extended	10 cc/min.
" " "	Retracted	10 cc/min.

Pilot valve force - normal.

LATERAL
Power Cylinder, Part No. 9720, Serial No. T601:

Internal Leakage Test	Neutral	12 cc/min.
" " "	Extended	6 cc/min.
" " "	Retracted	3 cc/min.

Pilot valve force - normal.

General operation of the above cylinders was satisfactory.

continued.....

Document disclosed under the *Access to Information Act*
Document divulgué en vertu de la *Loi sur l'accès à l'information*

LONGITUDINAL
Lock and Load Limiter, Part No. 8810, Serial No. 511:

Cracking Pressure	11 p.s.i.
Reseat	11 p.s.i.

LATERAL
Lock and Load Limiter, Part No. 8810, Serial No. 242:

Cracking Pressure	9 p.s.i.
Reseat	9 p.s.i.

Relief Valve, Part No. 8720, Serial No. 427:

Cracking Pressure	24.5 p.s.i.
Reseat	24.5 p.s.i.

Relief Valve, Part No. 8720, Serial No. 501:

Cracking Pressure	22 p.s.i.
Reseat	22 p.s.i.

General operation of the four preceding units was normal.

Yours very truly,

MASTER INSTRUMENTS LIMITED

W. Madill

WM:dp

Document disclosed under the *Access to Information Act*
Document divulgué en vertu de la *Loi sur l'accès à l'information*

APPENDIX 16

"E" Division
C.I.B.

YOUR NO.
VOTRE N°

OUR No. 68E-500-453
NOTRE N°

Victoria, B. C.
29 May 1968

23086

Regional Director,
Air Services,
Civil Aviation,
Department of Transport,
739 West Hastings Street,
Vancouver 1, B. C.

AIR SERVICES REGISTRY
VANCOUVER
MAY 30 1968
File 5002-715

Dear Sir:

Re: Par Frederick Raymond FLETCHER - Accidental Death (Aircraft Accident) - Nr. Aldergrove, B. C. - 14 March 1968

Further to my memorandum of 10 April 1968, attached please find a copy of Langley Municipal Detachment report dated 23 May 1968, covering the results of the Coroner's inquest.

Yours truly,

H. L. Jordan, Insp.,
Asst. C.I.B. Officer

Enc

Document disclosed under the *Access to Information Act*
Document divulgué en vertu de la *Loi sur l'accès à l'information*

AA
14/57

Document disclosed under the Access to Information Act
Document divulgué en vertu de la Loi sur l'accès à l'information

ROYAL CANADIAN MOUNTED POLICE - GENDARMERIE ROYALE DU CANADA

RCMP GRC 6880

C 237
REV. 1-4-66

OTHER FILE REFERENCES: REF. AUTRES DOSSIERS:	DIVISION	DATE	RCMP FILE REFERENCES: REF. DOSSIERS GRC:
PCR 27 Mar 68	"E"	23 May 68	68-500-25
	SUB-DIVISION-SOUS-DIVISION: New Westminster		
	DETACHMENT-DÉTACHEMENT: Langley Municipal		

RE: OBJET: Par Frederick Raymond FLETCHER, - Accidental Death (Aircraft Accident) 14 Mar 68, near Aldergrove, B.C.. (Org.)

PROPERTY OF R.C.M.P.—THIS POLICE RECORD IS SUPPLIED TO YOU BY THE R.C.M. POLICE FOR INFORMATION OF YOUR DEPARTMENT ONLY. IT IS NOT TO BE MADE KNOWN TO ANY OTHER AGENCY OR PERSON WITHOUT THE WRITTEN PERMISSION OF THE R.C.M.P.

1. On May 13th, 1968, at 7.30 P.M., the Inquest into the listed death was re-commenced at the Langley Mun. Det., court room and the following persons gave evidence as indicated;

(a) Dr. A.E. GRANT,(Pathologist) Sworn, gave evidence as indicated in pathological report referred to in para. #12 pcr dated 27 Mar 68.
(b) Cpl. W.J.STACEY, Sworn, entered photographs, and sketch, gave evidence as outlined in pcr dated 27 Mar 68.
(c) Mr. J.KEEFER,Mun. Soliciter, entered a Statement of Fact received from the D.O.T., via registered mail. The contents of said statement were read into the record of the proceedings and contained no information not already reported upon and contained in initial report listed above.

s.19(1)

(d) [redacted]n, gave evidence as contained in his statement.
(e) [redacted]worn, gave evidence as contained in his statement.
(f) [redacted] gave evidence as contained in his statement.
(g) [redacted]Sworn, gave evidence as contained in his statement. He was cross-examined with particular reference to the direction in which he first saw the helicopter flying by the Mun. Soliciter J.KEEFER, however, he did not vary from his original statement even though the weight of the evidence put to him clearly indicated that he was confused.
(h) [redacted] Sworn, gave evidence as contained in his statement.
(i) [redacted]rn, gave evidence as contained in his statement.
(j) Mr. James Edward MURPHY, Vancouver Manager for OK Helicopters Ltd., Vancouver, B.C., Sworn, gave evidence of being a qualified helicopter pilot, familiar with the type of machine involved in the accident. Testified that he knew FLETCHER (deceased) and on the day of the crash he had observed him prior to take-off and also at take-off at Vancouver, B.C.. MURPHY stated that FLETCHER appeared sober, normal and in good health, and that he (MURPHY) considered him to be a competent helicopter pilot. He also stated that he was very familiar with the type of aircraft involved, he considered the one that had crashed to have been in good shape and could offer no positive conclusions that would explain why the machine in question came down.

2. OK Helicpoters Ltd., Vancouver, B.C., were represented at the Inquest by Mr. David HUTTON, of the Law Firm of Campney, Owen & Murphy, Vancouver, BC..

3. Upon being instructed by the Coroner and after due deliberation the Jury returned the following Verdict; We the Jury find that Par Frederick FLETCHER died as a result of a helicopter accident on the Jackman Road hill, Langley Municipality, in the County of Westminster, in the Province of British Columbia between the hours of 11.30 A.M., and 12.00 Noon March 14th, 1968. The Deceased died as a result of a penetrating wound to the skull and lacerations to the heart and aorta. Cause of the accident was undetermined.

3. All Effects listed on form C246 have been returned to the next of Kin and the completed form properly signed and initialled is held on file at this point. No representative of the W.C.B., attended this Inquest. Concluded here.

(W.J.Stacey)Cpl.,

(W.L.M)Sgt.,
i/c Det..

Document disclosed under the Access to Information Act
Document divulgué en vertu de la Loi sur l'accès à l'information

part 2
app - 16

"E" Division
C.I.B.

YOUR No.
VOTRE N°

OUR No. 68E-500-453
NOTRE N°

Victoria, B. C.
10 April 1968

Regional Director,
Air Services,
Civil Aviation,
Department of Transport,
739 West Hastings Street,
Vancouver 1, B. C.

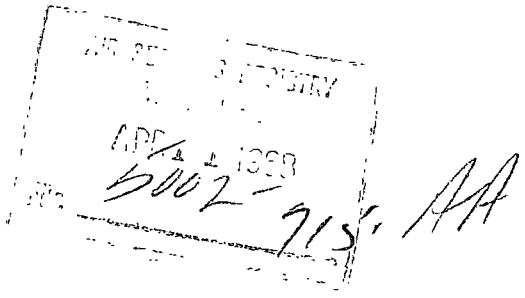

Dear Sir:

Re: Par Frederick Raymond FLETCHER - Accidental Death (Aircraft Accident) - Near Aldergrove, B. C. - 14 March 1968

Attached for your information please find a copy of our Langley Municipal Detachment report dated 27 March 1968, statements obtained from eye witnesses to this crash and copies of photographs which were taken at the scene of the accident.

Our investigation thus far has failed to indicate any suggestion of foul play and it would appear that the accident was a result of a mechanical malfunction.

Copies of subsequent reports will be forwarded upon receipt.

Yours truly,

H. L. Jordan, Insp.,
Asst. C.I.B. Officer

Enc

Document disclosed under the *Access to Information Act*
Document divulgué en vertu de la *Loi sur l'accès à l'information*

AA
14/3/6A

Document disclosed under the Access to Information Act
Document divulgué en vertu de la Loi sur l'accès à l'information

ROYAL CANADIAN MOUNTED POLICE - GENDARMERIE ROYALE DU CANADA

RCMP GRC 6880

C 237
REV. 1-4-66

OTHER FILE REFERENCES: REF. AUTRES DOSSIERS:	DIVISION	DATE	RCMP FILE REFERENCES: REF. DOSSIERS GRC:
First here.	"E"	27 Mar 68	
	SUB-DIVISION - SOUS-DIVISION: New Westminster		
	DETACHMENT - DÉTACHEMENT: Langley Municipal		68-500-25

RE: OBJET: Par Frederick Raymond FLETCHER, - Accidental Death(Aircraft accident) 14 Mar 68, near Aldergrove, B.C.. (Org.)

PROPERTY OF R.C.M.P. — THIS POLICE RECORD IS SUPPLIED [illegible] BY THE R.C.M. POLICE FOR INFORMATION [illegible] DEPARTMENT ONLY. IT IS NOT TO BE MADE AVAILABLE TO ANY OTHER AGENCY OR PERSON WITHOUT THE WRITTEN PERMISSION OF THE R.C.M.P.

1. At 11:58 A.M., 14 MAR 68, Mr. Karl DORFLINGER, 7025 Jackman Road, Aldergrove, B.C. contacted this office to advise that a helicopter had just crashed and was burning on his property in bushland adjacent to his buildings in an area known locally as the Jackman Hill, and located roughly midway between the town site of Aldergrove, B.C. and the Fraser River.

2. The writer accompanied by Cst. O. Forsyth made an immediate patrol to the area, approaching from the north on Jackman Road, and Sgt. W. Maguire, alone in another transport approached the area from the south on Jackman Road. This approach was necessitated by prior knowledge of an extensive washout on the Jackman road on the hill in question where the road descends to the bottomlands adjacent to the Fraser River. D.O.T. and AIR SEA RESCUE were on stand-by, awaiting confirmation of the accident from this office. The Jackman Hill at the crash area is 263' above sea level, according to local records, and is actually part of a ridge that parallels the Fraser River for some miles in either direction.

3. Upon arrival on foot at the top of the hill on the DORFLINGER property, Cst. Forsyth and myself were directed to the bushland area of his farm, which is north of his buildings (see Appendix "G"), and upon entering the bush came almost at once upon the main rotor of the helicopter. Proceeding farther into the bush which thickened to heavy bush we came upon the main wreckage of the helicopter which was burning, and contained, also, the burning remains of what was obviously one human body. (See photo #3). It was apparent that the body in the wreckage was beyond medical aid, and considering the existing conditions, burning aviation fuel and molten metal, it was decided that any attempt to remove the body at this time would be a futile and pointless endeavour and presented unwarranted danger to those present. It had commenced raining heavily and the existing bush conditions, coupled with deteriorating ground conditions ruled out the possibility of bringing in heavy fire fighting equipment and the use of hand equipment would have been valueless.

4. Sgt. Maguire, after viewing the immediate scene, proceeded back to the DORFLINGER residence to contact our Identification Section, the Department of Transport, Air Sea Rescue Center, New Westminster S/Div., and Okanagan Helicopters, Vancouver, B.C. Cst. Forsyth was detailed to the road entrance of the DORFLINGER property to control anticipated pedestrian and vehicular traffic, which was increasing in volume. DORFLINGER was retained as a guard at the main crash site, and the writer carried out a perimeter search of the crash area, trying to establish how large an area was involved and required guarding pending the arrival of the D.O.T. investigators. Other persons at the scene at this time were, with the exception of DORFLINGER, eye-witnesses who arrived in a couple of instances prior to the police, or who had identified themselves to us and come into the area upon our arrival. They are listed as follows, and their respective statements are attached as indicated.

s.19(1) (a) [redacted] Appendix 'A'.

(Cont'd Page two)

Document disclosed under the Access to Information Act
Document divulgué en vertu de la Loi sur l'accès à l'information

s.19(1)

(Cont'd from Page One)

4. (b) [redacted] -
APPENDIX 'B'

(c) [redacted] -
APPENDIX 'C'

(d) [redacted] -
APPENDIX 'D'

(e) [redacted] Appendix 'E'

(f) [redacted] - Appendix 'F'

5. The Air Sea Rescue helicopter, from Canadian Forces Base, Comox, Vancouver Island, arrived at the scene at approximately 1:15 P.M., crewed by Capt's R.O. HUGHES and R. RASMUSSEN, Sgt. R.N. GIRARD, and Cpl's K. NED and FRANK, and placed themselves at our disposal. They examined the scene on the ground and aloft and concurred with the police actions taken. They also provided an expendable body bag for the subsequent removal of the human remains. As they could provide no further assistance they departed the scene within the hour.

6. The following representatives of O.K. Helicopter's Ltd., Vancouver, B.C. arrived on the scene via helicopter.

(a) William Donovan CROWE, Pilot and Assistant President

(b) Gordon ASKIN, Chief Engineer

(c) Roderick FRASER, Chief Inspector

PROPERTY OF R.C.M.P. — THIS POLICE RECORD IS SUPPLIED TO YOU BY THE R.C.M. POLICE FOR INFORMATION OF YOUR DEPARTMENT ONLY. IT IS NOT TO BE MADE KNOWN TO ANY OTHER AGENCY OR PERSON WITHOUT THE WRITTEN PERMISSION OF THE R. C. M. P.

Upon identifying themselves, they were allowed into the crash area, and also placed their pilot and helicopter at the disposal of our Identification Section and the writer for the purpose of photographs (See photo #1) and for an air examination and view of the crash site.

7. The following members of the D.O.T. arrived on the scene by car.

(a) C. LEYLAND, Regional Superintendent Aircraft Accident Investigation

(b) T.M. YOUNG, Aircraft Accident Investigation

(c) Roy JOBLING, Aircraft Accident Investigation

and assumed responsibility for the investigation. They were advised of our actions thus far and shown where we had found the rotor, main wreckage, and other components and articles originating from the crashed helicopter. They were advised of the eyewitnesses located and arrangements were concluded for interviewing them on the 15 MAR 68 at the Detachment office. The following guards were hired to protect the scene for the D.O.T. members.

(a) Robert GRIFFITHS - [redacted]

(b) Karl DORFLINGER -

(Cont'd Page t

Document disclosed under the Access to Information Act
Document divulgué en vertu de la Loi sur l'accès à l'information

RE: Par Frederick Raymond FLETCHER - Sudden Death — PAGE three

s.19(1)

(Cont'd from Page two)

7. Guards hired, cont'd -

(c) Larry James JOINSON -

(d) Conrad MILLER -

and the appropriate returns (Form F95) have been submitted.

8. The only articles picked up at the scene prior to the arrival of the D.O.T. members were Items #'s 1, 2 & 3, as listed on form C 246, and they were so advised. The other Items listed were obtained after their arrival and moved only upon receipt of D.O.T. approval.

9. Investigation disclosed that the pilot and only occupant of the helicopter was:

Par Frederick Raymond FLETCHER (Divorced)
c/o Mrs. C. CRUISE - 6376 Collingwood St., Vancouver, B.C.
Born : 30 APR 26, Moose Jaw, Saskatchewan
Next of Kin: Mr. Fred C. FLETCHER (father)
4231 - 8th Ave., Regina, Sask.
Employed by: O.K. Helicopters Ltd., Vancouver, B.C.

The helicopter involved and flown by FLETCHER was:

(a) Fairchild - Hiller

(b) Model # FH - 1100

(c) Canadian Registration # CF-WMO

(d) Owned by O.K. Helicopters Ltd., Vancouver, B.C.

(e) Valued at $120,000.00

PROPERTY OF R.C.M.P.—THIS POLICE RECORD IS SUPPLIED TO YOU BY THE R.C.M. POLICE FOR INFORMATION OF YOUR DEPARTMENT ONLY. IT IS NOT TO BE MADE AVAILABLE TO ANY OTHER AGENCY OR PERSON WITHOUT THE WRITTEN PERMISSION OF THE R. C. M. P.

10. The identity of FLETCHER was tentatively established at the crash site and he was then removed to the Columbia Funeral Home, Langley, B.C. His identity was confirmed by his father 15 MAR 68, after viewing the remains and an engraved Masonic Ring removed from the body that he had personally given to his son. A fellow pilot - William Donovan CROWE - O.K. Helicopters also saw FLETCHER take off from Vancouver Airport and confirmed that he was alone at this time.

11. Investigation has disclosed that this flight commenced in Vancouver, B.C., and was unscheduled. FLETCHER was a stand-by pilot. It was being made to the Ruby Creek area near Agassiz, B.C., to take over the charter duties of another O.K. Helicopter that had also crashed on the 14 MAR 68. Information from eye witnesses indicate that the aircraft was proceeding in a normal manner (see attached appendices). All of them agree that initially there was a loud abnormal sound, and then the aircraft fell towards the ground and disappeared below the tree-line, with the main fuselage apparently separated from the main rotor. An explosive sound

(cont'd page four)

Document disclosed under the *Access to Information Act*
Document divulgué en vertu de la *Loi sur l'accès à l'information*

Par Frederick Raymond FLETCHER - Sudden Death

(Cont'd from Page three)

11. Cont'd.....An explosive sound was then heard followed by a pillar of smoke. Examination of the scene and the immediate area disclosed the main rotor in one location, the main wreckage in another location (as indicated in para #3), components and fragments of same scattered widely over a considerable area in a line running N.W. to S.E. (See appendix 'G'). Regarding the initial loud abnormal bang heard by the witnesses, they were questioned closely on this point, and it was established, with some degree of constancy, that the sound was of a mechanical rather than explosive nature. There were no birds seen by witnesses. This, together with the fact that the flight was unscheduled would appear to rule out the possibility of foul play with regard to the aircraft or pilot. The scattered pattern of the wreckage would indicate that the aircraft came apart in the air, as the density of the brush would preclude such lengthy scattering when the fuselage struck the ground.

12. Coroner L.M. McDonald was contacted, ordered removal of the body, an autopsy and an inquest. The autopsy was performed by Dr. A.E. Grant, 10:30 a.m., 15 MAR 68, at the Columbia Funeral Home, Langley, B.C. He confirmed FLETCHER's death at the time of the crash and his findings were:

(a) ANATOMICAL DIAGNOSIS:

1. SEVERE TRAUMA INCLUDING ONE PENETRATING WOUND OF THE SKULL.
2. MULTIPLE FRACTURES TO LEGS.
3. MULTIPLE LACERATIONS OF HEART.
4. MULTIPLE LACERATIONS OF AORTA.
5. EXTENSIVE BURNS TO THE ENTIRE BODY.

(b) CAUSE OF DEATH:

PENETRATING WOUND OF SKULL AND LACERATIONS TO HEART AND AORTA.

13. The Inquest was commenced at 4:00 P.M., 15 MAR 68 at the Columbia Funeral Home, Langley, B.C. for viewing and identification only, Coroner L.M. McDonald presiding, with the following Jury:

s.19(1)

Jens Anton JENSEN -
James Harry WARMAN -
Peter WONG -
Donald James KLICK -
Stephen GANGER -
Joseph Hartwell YOUNG -
Dennis Gerald HORGAN -

Witnesses: Father (Sworn) identified FLETCHER. Inquest was then adjourned to 13 MAY 68 to permit D.O.T. to complete their investigation.

(Cont'd page five)

PROPERTY OF R.C.M.P.—THIS POLICE RECORD IS SUPPLIED TO YOU BY THE R.C.M. POLICE FOR INFORMATION OF YOUR DEPARTMENT ONLY. IT IS NOT TO BE MADE KNOWN TO ANY OTHER AGENCY OR PERSON WITHOUT THE WRITTEN PERMISSION OF THE R. C. M. P.

Document disclosed under the *Access to Information Act*
Document divulgué en vertu de la *Loi sur l'accès à l'information*

Par Frederick Raymond FLETCHER - Sudden Death

(Cont'd from Page four)

14. The body of FLETCHER was cremated at the Vancouver Crematorium, Vancouver, B.C., 18 MAR 68. The ashes are still in their custody and it is the wish of the next-of-kin that they be scattered over the mountains. O.K. Helicopter officials advise that within the next 6 weeks when conditions are favourable the ashes will be scattered in the Crown Mountain area north of the Grouse Mountains, North Vancouver, B.C.

15. Next-of-Kin advised. C.O. advised Re: Telex #NWR 426. Forms C 246 completed and attached, original held at this point. Photos taken by Ident. backed and attached, together with Forms C 164. Appendices attached, original statements of witnesses held this point. Sketch of scene attached (Appendix 'G') . The Workmen's Compensation Board are being supplied with particulars of this incident and also advised of Inquest date. The provisions of para #16, AER - reg OP. Man. were complied with.

s.19(1)

16. Further to the statement of [redacted] (appendix 'f') it will be noted that his time reference is 9:30 A.M. This was brought to his attention after all other available witnesses had been questioned by the writer and he admitted that he had erred and his time estimate should have been around 12:00 NN on the day in question.

S.U.I.

D.D. 15-6-68

PROPERTY OF R.C.M.P.—THIS POLICE RECORD IS SUPPLIED TO YOU BY THE R.C.M. POLICE FOR INFORMATION OF YOUR DEPARTMENT ONLY. IT IS NOT TO BE MADE KNOWN TO ANY OTHER AGENCY OR PERSON WITHOUT THE WRITTEN PERMISSION OF THE R.C.M.P.

Wm. J. Stacey Cpl.
(W.J.R. Stacey) #16069.
Langley Municipal Det.

(W.I.M.) Sgt., 40
i/c Det.
68NW 500-39
CO "E" DIV RCMP

FORWARDED 2-4-68, for your information. The file subject left Vancouver in the aircraft, destination Ruby Creek, B.C. While passing over the DORFLINGER property near Aldergrove, B.C., an abnormal sound was heard by witnesses. The rotor blades separated from the fuselage and the aircraft crashed to the ground and burned. The file subject, who was the pilot and alone, was fatally injured and burned.

2. There was no indication of foul play in this case and it was determined that there was a mechanical malfunction. Refer to paragraph 11 in this connection.

3. The results of the autopsy and cause of death are given in paragraph 12. Results of the Inquest are awaited.

4. Copy of statements, photographs, Forms C-164 and C-246, sketch of the scene of the crash are attached as noted in paragraph 15.

S.U.I.

(H.E. Bloxham) Supt.,
O.C. New Westminster Sub/Division

Document disclosed under the *Access to Information Act*
Document divulgué en vertu de la *Loi sur l'accès à l'information*

RE:
OBJET.
Par FLETCHER - Sudden Death

PAGE

APPENDIX 'A'

1:45 P.m., 15 MAR 68

STATEMENT of [redacted]

s.19(1)

On March 14th. 1968, a little bit before twelve, I was sitting with my friend, [redacted] on the dike at the bottom of the bluff. From where I was sitting the helicopter was crossing my field of vision. I heard the helicopter before I looked at it. I wouldn't have bothered to look at the machine except that I heard this unusual sound, like a sharp crack and when I looked the helicopter was in a steep dive, and above it at least a tree length distance, was some fluttering objects. The 'copter made no noise as it was falling, and there was silence until it hit the ground. Then there was a hell of a bang! A second or so later there was a dull whoosh and then the smoke rose in the air. There was nothing that I could hear or see in the sky at the time I looked at the helicopter. It was cloudy, with no rain and no wind where I was sitting. I don't know which way the helicopter was going, but it fell from west to east.

WITNESS:

Cpl. W.J. Stacey,
R.C.M.P.

(Signed) [redacted]

PROPERTY OF R.C.M.P.—THIS POLICE RECORD IS SUPPLIED TO YOU BY THE R.C.M. POLICE FOR INFORMATION OF YOUR DEPARTMENT ONLY. IT IS NOT TO BE MADE AVAILABLE TO ANY OTHER AGENCY OR PERSON WITHOUT THE WRITTEN PERMISSION OF THE R.C.M.P.

Document disclosed under the *Access to Information Act*
Document divulgué en vertu de la *Loi sur l'accès à l'information*

RE:
OBJET. Par FLETCHER - Sudden Death

PAGE

APPENDIX 'B'

12:40 P.M. 15 MAR 68

STATEMENT of [redacted]

(no phone)

s.19(1)

On March 14th, 1968, I was sitting with my neighbour at lunch time on the dike about a quarter mile from the crash scene at the bottom of the bluff. My neighbour is [redacted]. We were talking and we heard the helicopter was heading east, it was chopping away normally. I heard it approaching only for a short time, at the very most only thirty seconds. I looked at it because the motor didn't sound right and was louder than the chopping noise. Then there was a sputtering and all noise stopped. I saw the helicopter tilting over fairly high above the tree line, surrounded by drifting chunks. Then the helicopter nosed down steeply. The machine dove straight down without whirling or tumbling, and went out of sight into the trees. There was a thud and then a whoosh. I did not see any smoke until after I got to the crash area. It was cloudy at the time and not raining. There was no wind where I was at this time.

Witness:

Cpl. W.J. Stacey

(Signed) [redacted]

PROPERTY OF R.C.M.P. — THIS POLICE RECORD IS SUPPLIED TO YOU BY THE R.C.M. POLICE FOR INFORMATION OF YOUR DEPARTMENT ONLY. IT IS NOT TO BE MADE AVAILABLE TO ANY OTHER AGENCY OR PERSON WITHOUT THE WRITTEN PERMISSION OF THE R.C.M.P.

Document disclosed under the *Access to Information Act*
Document divulgué en vertu de la *Loi sur l'accès à l'information*

Par FLETCHER - Sudden Death

APPENDIX 'C'

s.19(1)

12:15 P.M. 15 MAR 68

STATEMENT of [redacted]

Around noon, I'm not sure of the exact time on the 14th day of March, 1968, I was in my barn with the tractor running, when I heard a loud noise. I ran outside and saw this helicopter heading into the ground, surrounded by a lot of debris in the air, that I thought was paper or fabric. The machine appeared to be intact, the tail and body was in one piece. I was looking southwest, and the helicopter was falling from my right to my left in an easterly direction at a very steep angle. I heard a thud and an explosion followed by a cloud of smoke. I did not see the aircraft hit the ground. I can't say whether it was raining or not, and it was cloudy. It was not windy where I was in the valley. There were no other aircraft or birds in the air while I was looking at the helicopter. When I first saw the helicopter it was something like a hundred feet above the trees at the top of the bluff.

Witness:

Cpl. W.J. Stacey,
R.C.M.P.

(Signed) [redacted]

PROPERTY OF R.C.M.P. — THIS POLICE RECORD IS SUPPLIED TO YOU BY THE R.C.M. POLICE FOR INFORMATION OF YOUR DEPARTMENT ONLY. IT IS NOT TO BE MADE AVAILABLE TO ANY OTHER AGENCY OR PERSON WITHOUT THE WRITTEN PERMISSION OF THE R.C.M.P.

Document disclosed under the *Access to Information Act*
Document divulgué en vertu de la *Loi sur l'accès à l'information*

APPENDIX 'D'

s.19(1)

11:50 A.M. 15 MAR 68

STATEMENT of [redacted]

On March 14th, 1968, at approximately 11:45 A.M., I had just stepped out in front of the house, and saw a helicopter on the top of the Jackman Hill, just north of Dorflinger's house. The helicopter seemed to be going west toward Vancouver. It was about 75 feet above the tree tops. There was a loud hammering noise like when they turn, and then there was a sharp crack. The helicopter was flying straight and level. After the loud crack some long object flew off of the machine from the top of it. I was about a quarter of a mile away and looking uphill. The 'copter made a sharp right turn to the north, tilted over on its side and headed down nose first at about an 80° angle. The tail assembly was still on as far as I could still see. It disappeared in the trees and there was a loud thump, the trees hid any smoke that might have come from the ground. I saw no other objects come off of the machine. It was overcast, with a steady wind at this time. I think the wind was blowing west, and very light. I don't think it was raining. I saw nothing in the air except the helicopter.

Witness:

Cpl. W.J. Stacey,
R.C.M.P.

Signed: [redacted]

PROPERTY OF R.C.M.P.—THIS POLICE RECORD IS SUPPLIED TO YOU BY THE R.C.M. POLICE FOR INFORMATION OF YOUR DEPARTMENT ONLY. IT IS NOT TO BE MADE KNOWN TO ANY OTHER AGENCY OR PERSON WITHOUT THE WRITTEN PERMISSION OF THE R.C.M.P.

Document disclosed under the *Access to Information Act*
Document divulgué en vertu de la *Loi sur l'accès à l'information*

RE: OBJET.

Par FLETCHER - Sudden Death

PAGE

APPENDIX 'E'

s.19(1)

11:15 A.M. 15 MAR 68

STATEMENT of [redacted]

Around ten minutes to twelve I was going into the house for lunch and it was kind of windy. I heard a helicopter and saw it coming from the direction of Vancouver. The engine sounded odd. I had a good view of it. The helicopter was way higher than the trees on top of the bluff. I saw something fly off of the machine, it was quite long and fell over the back of the plane and flew away. Then the body of the helicopter seemed to fall straight down in one piece into the trees and then there was a cloud of smoke accompanied with a thump. It was cloudy at the time, but quite clear. It was not raining. The machine looked orange coloured. The machine was flying straight and level. The only thing I saw in the air at this time was the helicopter. I would be about a mile and one half away from the plane when this happened.

Witness:

Cpl. W.J. Stacey
R.C.M.P.

(Signed) [redacted]

PROPERTY OF R.C.M.P.—THIS POLICE RECORD IS SUPPLIED T... BY THE R.C.M. POLICE FOR INFORMATION OF ... DEPARTMENT ONLY. IT IS NOT TO BE MA... TO ANY OTHER AGENCY OR PERSON WITHOUT THE WRITTEN PERMISSION OF THE R.C.M.P.

Document disclosed under the *Access to Information Act*
Document divulgué en vertu de la *Loi sur l'accès à l'information*

Par FLETCHER - Sudden Death

APPENDIX 'F'

s.19(1)

10:45 A.M. 15 MAR 68

STATEMENT of [redacted]

On March 14th, 1968, at approximately 9:30 A.M., I was on Jackman Road, walking north towards Karl DORFLINGER's about one half mile south of his farm. I heard a helicopter coming over from the east. It was coming from the direction of Abbotsford. I looked up, saw the helicopter at about 200 feet high, flying in a straight line. I could hear the motor running, then all of a sudden I heard a bang and the helicopter was even with Jackman Road, and ahead of me. The bang was dull like stumping powder. Then the helicopter started to fall and went into the bush. I did not see anything come off of the helicopter. There was another crash, very loud, which shook the ground, and then I could see smoke. It was raining, not too hard, I do not recall any wind. It was fairly clear and not hard to see. When I heard the bang I was watching the helicopter, and I did not see any smoke come from it. It started to tumble end over end into the bush. I did not see any lights on the helicopter.

Witness:

Cpl. W.J. Stacey

(Signed) [redacted]

PROPERTY OF R.C.M.P.—THIS POLICE RECORD IS SUPPLIED [illegible] BY THE R.C.M. POLICE FOR INFORMATION OF YOUR DEPARTMENT ONLY. IT IS NOT TO BE MADE KNOWN TO ANY OTHER AGENCY OR PERSON WITHOUT THE WRITTEN PERMISSION OF THE R.C.M.P.

Document disclosed under the Access to Information Act
Document divulgué en vertu de la Loi sur l'accès à l'information

Par FLETCHER - Sudden Death

APPENDIX 'C'

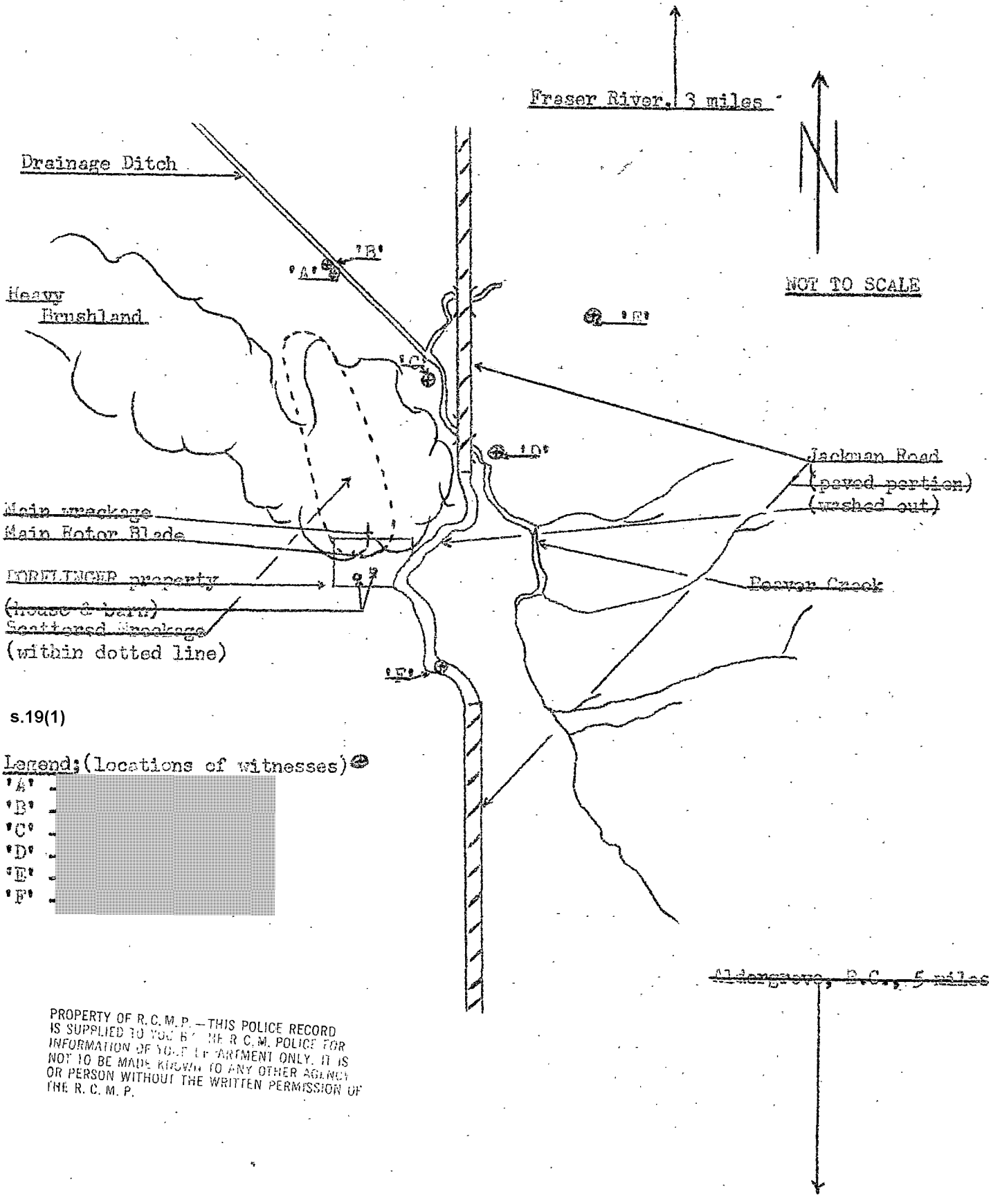

s.19(1)

Legend;(locations of witnesses)

'A' -
'B' -
'C' -
'D' -
'E' -
'F' -

PROPERTY OF R.C.M.P.—THIS POLICE RECORD IS SUPPLIED TO YOU BY THE R.C.M. POLICE FOR INFORMATION OF YOUR DEPARTMENT ONLY. IT IS NOT TO BE MADE KNOWN TO ANY OTHER AGENCY OR PERSON WITHOUT THE WRITTEN PERMISSION OF THE R.C.M.P.

Document divulgué en vertu de la *Loi sur l'accès à l'information*

Appendix 15

Document disclosed under the *Access to Information Act*
Document divulgué en vertu de la *Loi sur l'accès à l'information*

3:00

3:30

4:00

4:30

5:00

JULIAN 8204 JULIENNE

204 **JUIL 22 JULY** 000313 2

Document disclosed under the *Access to Information Act*
Document divulgué en vertu de la *Loi sur l'accès à l'information*

PATHOLOGICAL REPORT

ROYAL COLUMBIAN HOSPITAL

DATE March 18/68 TISSUE NO. 68-NS-43

PATIENT FLETCHER, Frederick Raymond HOSPITAL NO. R WARD AGE

PHYSICIAN Coroner L. M. McDonald

SEND REPORT TO HOSPITAL OFFICE ☐ ☐

ADDRESS

TISSUES:

PRE-OPERATIVE DIAGNOSIS:

POST-OPERATIVE DIAGNOSIS:

HISTORY AND OPERATIVE FINDINGS:

RECEIVED
MAR 19 1968
LANGLEY MUN. DET.
R. C. M. POLICE

REPORT OF FINDINGS

GROSS

CIRCUMSTANCES OF DEATH:

The body of this middle-aged white male was found at the site of a helicopter crash in the municipality of Langley, B.C. on the 14th of March 1968.

Tentative identification was made as that of the pilot Mr. Frederick Raymond Fletcher.

The autopsy was performed at 10:30 A.M., at the Columbia Funeral Home in the city of Langley on the 15th of March 1968.

The body was identified by Mr. A. Anderson as that found at the scene of the crash.

GROSS AUTOPSY FINDINGS:

The body was that of a middle-aged white male, which had received multiple injuries and which had been burnt extensively. The body was sufficiently burned that facial features could not be recognized. Most of the clothing had been burnt from the body.

There was a penetrating wound in the right temple measuring approximately 1.5 cm. in diameter. The margins of this wound were scorched however the adjacent wound was fragmented and irregular in shape indicating penetration by a blunt object. The brain adjacent to the ~~hook~~ wound was macerated.

The anterior of the chest wall was badly burned with very little remaining of the pectoral muscles. Portions of the sternum and rib cage had been completely burned away, more so on the right side of the chest leaving a gaping hole some 7 cm. in diameter. The anterior abdominal wall had been burnt away and portions of the small bowel badly burned. The left leg had a jagged compound fracture just above the knee extending to the femur and most of the surrounding soft tissue. In addition there was a compound fracture of the tibia and fibula just above the ankle. On the right leg the skin of the thigh had been burned away and portions of the muscles remained only. The right foot had been burned off and portions of the charred calcaneous was all that could be identified. The limbs were badly scorched.

PATHOLOGICAL DIAGNOSIS

cont'd

PATHOLOGIST

Document disclosed under the *Access to Information Act*
Document divulgué en vertu de la *Loi sur l'accès à l'information*

INTERNAL EXAMINATION:

THORAX:

The lungs were partially collapsed and surrounded by congealed and hemolyzed blood. The lung parenchyma was partially burned and grossly distorted by heat.

HEART:

There were three lacerations extending into the heart, one in the anterior surface of the right ventricle measuring approx 1.5 cm. in length, one in the anterior surface of the left ventricle measuring approx. 1 cm. in length, and one in the posterior surface of the left ventricle measuring approx 2 cm. in lenth. Each of these lacerations extended through the full thickness of the myocardium. Associated with these lacerations were lacerations in the pericardium. There were two major lacerations in the aorta, one just above the aortic valve, there was almost a complete transection of the aorta at this point. The second linear transection of the aorta had the curve in the arch extending a length of 4 cm. at the site of origin of the great vessels. No blood remained in the heart or the great vessels and repeated attempts of aspiration of all the major vessels in the body failed to produce sufficient blood for blood alcohol examination.

ABDOMEN:

The abdomen was grossly distored by the fire and all abdominal organs showed the effect of extreme heat with extreme edema and in some areas charring of tissues. Grossly the organs appeared unremarkable.

ANATOMICAL DIAGNOSIS:

1. SEVERE TRAUMA INCLUDING PENETRATING WOUND OF THE SKULL.
2. MULTIPLE FRACTURES TO LEGS.
3. MULTIPLE LACERATIONS OF HEART.
4. MULTIPLE LACERATIONS OF AORTA.
5. EXTENSIVE BURNS TO THE ENTIRE BODY.

CAUSE OF DEATH:

PENETRATING WOUND OF SKULL AND LACERATIONS TO HEART AND AORTA.

A. E. Grant, M.D. - Pathologist

AEG:id

Document disclosed under the *Access to Information Act*
Document divulgué en vertu de la *Loi sur l'accès à l'information*

5002-715 (AAV)

REGISTERED

739 West Hastings Street,
Vancouver 1, B.C.
May 8, 1968.

The Coroner,
C/O R.C.M.Police
Langley Municipal Detachment,
Box 280,
Langley, B.C.

Dear Sir:

The following is a statement of fact as determined in our investigation into the accident to Hiller FH-1100 helicopter, registration CF-WMO, March 14, 1968, approximately 5 miles east of Fort Langley, B.C., on behalf of the Department of Transport.

1. A Certificate of Registration had been issued for the helicopter and was valid at the time of the accident.

2. A Certificate of Airworthiness had been issued for the helicopter and was valid at the time of the accident.

3. The pilot held a valid Airline Transport Pilot Licence, endorsed for Hiller FH-1100 helicopters, and had adequate experience to conduct the flight.

4. Evidence at the accident scene indicates that the helicopter had started to disentigrate in the air. Parts of the helicopter and contents were strewn over a large area with the main rotor assembly located 420 feet southwest of the main wreckage. The helicopter fuselage had struck the ground, in a near vertical nose down attitude, and burned.

5. Examination of the wreckage shows no evidence of interior or exterior objects foreign to the helicopter having caused the initial breakup. Metallurgical examination of the main rotor shaft failure shows no evidence of material faults at the fracture.

6. The primary cause of this accident has not been determined and is still under investigation.

R. J. Jobling,
Accident Investigator

T. M. Young
Accident Investigator

TY/mim

000316

Document disclosed under the *Access to Information Act*
Document divulgué en vertu de la *Loi sur l'accès à l'information*

5002-715 (AAV)

739 West Hastings Street,
Vancouver 1, B.C.
May 15, 1968.

Fairchild Hiller,
Aircraft Division,
Hagerstown, Maryland.
U. S. A. 21740

ATTENTION: Mr. James G. Baker,
Supervisor, Field Service.

Dear Sirs:

RE: Accident Hiller FH-1100, CF-WMO
March 14, 1968.

We are forwarding one copy of the completed wreckage scatter plot as requested by Mr. Baker, for your perusal and retention. We trust that this scatter plot will be of assistance to you in your investigation concerning this accident.

Also, with regard to the subject accident, we would appreciate receiving the performance data for FH-1100 helicopters requested from Mr. Baker, which was to include -

(a) the effects of rapid reduction of collective control during operation at or near Vne:

(b) the effects of moderate or extreme turbulence:

(c) the recommended Hiller procedure for turbulence penetration under unexpected conditions.

Your co-operation in providing this and any other information which you may have would be of great assistance in our investigation to determine the cause of this accident.

Yours truly,

T. M. Young

C. Leyland,
for. Regional Superintendent,
Accident Investigation

TY/mim

ENCL

000317

Document disclosed under the *Access to Information Act*
Document divulgué en vertu de la *Loi sur l'accès à l'information*

ADMA, OTTAWA
No. 3 Temporary Bldg.
ATTN: CAIE

5002-715 (AAV)

RDAS, VANCOUVER

July 13, 1968

ACCIDENT - Hiller FH-1100, CF-WMO
March 14, 1968.

1. As requested in our telephone conversation of July 12, 1968, we are sending you the meteorological data obtained from the Vancouver Weather Office.

2. We have also approached Mr. K. F. Harry, Regional Superintendent, General Weather Services, on the feasibility of having weather conditions recorded at the accident scene simultaneous with recordings at Vancouver and Abbotsford. His feelings are that more accurate and useful information could be obtained and conditions duplicated in wind tunnel tests. However, once we receive your letter outlining the information you require we will discuss this with Mr. Harry and be able to give you a more definite answer on the subject.

P. M. Young
for Regional Director, Air Services

TY/mim

ENCL

000318

Document disclosed under the *Access to Information Act*
Document divulgué en vertu de la Loi sur l'accès à l'information

APPENDIX 12

FAIRCHILD HILLER
AIRCRAFT DIVISION

7 June 1968

Ref: SD-68-5635-JGB/mjb

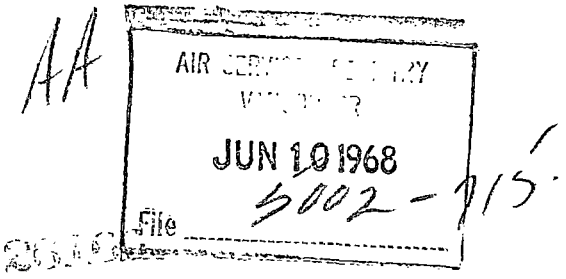

Mr. Tom Young
Department of Transport
Ministere Des Transports
739 West Hastings Street
Vancouver 1, B.C., Canada

Dear Tom:

Thanks for the print on the scatter pattern for the CF-WMO accident. Your letter 5002-715 requested information regarding the effects of rapid reduction of collective control near VNE and the effect of turbulence.

We are presently conducting a flight and analytical test program to determine if certain combinations of unusual flight conditions and turbulence could cause a safety of flight situation. We expect to have this testing completed the early part of June. At this time all operators will be advised of our recommendations. We will send you a copy of this report.

You also requested the force on the hydraulic power cylinder. The maximum feed-back force on the power cylinders are:

Longitudinal	-	912 pounds
Lateral	-	972 pounds
Collective	-	456 pounds

Also enclosed is a copy of the accident report you requested

Very truly yours,

FAIRCHILD HILLER CORPORATION
Aircraft Division

J. G. Baker
Supervisor, Service

Enclosure

Document disclosed under the *Access to Information Act*
Document divulgué en vertu de la *Loi sur l'accès à l'information*

Document disclosed under the Access to Information Act
Document divulgué en vertu de la Loi sur l'accès à l'information

FAIRCHILD HILLER
AIRCRAFT DIVISION

INTER-OFFICE COMMUNICATION

Subject: Trip to Okanagan to Investigate Accident - FH-1100, S/N 96

To: Messrs. B. Davis, E. Morton

Date: 25 March 1968

In reply refer to: E-68PR1074

From: A. Bonnell, J. Baker

The subject aircraft was totally destroyed in an accident at 11:43 A.M. on Thursday March 14, 1968. The aircraft was being ferried from Vancouver Airport to a construction site near Hope, British Columbia to relieve a S-55 helicopter that had been damaged by rotor blade contact with a high-line tower. The Okanagan pilot, Par Fletcher, age 41, was fatally injured in the accident.

After a phone report from Okanagan, Glen Pearson, local area F-H service rep, was dispatched to Vancouver arriving at 6:00 P.M. March 14th. He immediately contacted Gordon Askin, Okanagan Maintenance Superintendent, and made arrangements to proceed to the scene with DOT and Okanagan representatives.

The writers, J. Baker, F-H Service and A. Bonnell, Engineering, along with L. Gaubis, Engineering were dispatched to Vancouver Friday morning March 15th, arriving at 5:00 P.M. Our mission was to render assistance in the accident investigation.

Upon arrival we met Glen Pearson who introduced us to T. Young, DOT representative in charge of the investigation. Mr. Young explained the accident area was under quarantine by DOT. We were welcomed to accompany the investigators the next morning. We were free to look and photograph but not to handle any of the wreckage until cataloguing by a survey team was completed. Any infractions of this rule could result in being barred from the area. (Mr. Young stated that Glen Pearson had assisted in the preliminary investigation on the previous day and had been very helpful).

Saturday, March 16th

Glen Pearson, L. Gaubis and the writers proceeded to the scene where we met DOT and Allison representatives. After touring the crash site, Mr. Young asked if we would assist in locating and marking pieces of wreckage, for cataloguing by the survey team.

Document disclosed under the *Access to Information Act*
Document divulgué en vertu de la *Loi sur l'accès à l'information*

The wreckage was scattered for over a quarter of a mile along a ridge covered with dense woods. The survey team was in the process of plotting a reference line with which to map the wreckage pattern. The balance of the day was spent locating and flagging pieces of wreckage. The scatter pattern determined is approximately as described on the map, Attachment 1. Because of the dense underbrush, distances are estimated.

Sunday, March 17th

Sunday we continued marking scatter pattern parts and moved the main wreckage out of the woods to a clear area. Sifted ashes for parts. Counted rod ends to establish completeness of control system. Started to gather parts from the scatter pattern that had been catalogued by the survey team.

Monday, March 18th

Finished gathering parts from the scatter pattern. Moved wreckage to DOT Building, Vancouver Airport. Interviewed witnesses.

Tuesday, March 19th

Layout of wreckage in DOT building. Layout of control system for check of hinge points. Upper controls were determined to be intact when rotor mast broke (See summary). Started reconstructing enclosure plexiglass to check for strike marks.

Wednesday, March 20th

Opened transmission. All parts appeared normal except for impact damage. Allison representatives completed engine disassembly. It was determined that the engine was running on impact. Completed assembly of glass enclosure for R.C.M.P. ballistics inspector on Friday. Matched strike marks in attempt to determine sequence of events.

Thursday, March 21th

Departed Vancouver.

SUMMARY

Weather conditions were as follows:

Overcast, approximately 3,000 feet
OAT 40° F
Wind from South/East at 15-20 mph
Moderate to severe turbulence in the area
No precipitation

Aircraft was flying on Southeasternly heading. After crossing Frazer River Valley it crossed a wooded ridge approximately 200 ft. elevation. Shortly after crossing this ridge line something caused the aircraft to go out of control.

Document disclosed under the *Access to Information Act*
Document divulgué en vertu de la *Loi sur l'accès à l'information*

After the main rotor assembly separated from the aircraft, the yellow-tipped blade penetrated the forward, right-hand section of the cockpit in the area of the battery and instrument console. The strike was trailing edge first. The tip section contacted the right-hand rudder pedal assembly.

The same blade also contacted the left-hand rear landing gear strut about 12" from the torque tube. The strut was broken by the impact and it along with the skid runner separated from the aircraft.

The tail rotor struck the pylon spar breaking both blades approximately 8" from the root. One blade tip, 1 1/2" long was broken off on contact with the spar. It has not been determined what caused the tail rotor to contact the pylon spar. There is no evidence of any foreign object striking the tail rotor.

The body section of the helicopter impacted in a nose down attitude, coming to rest in an inverted position. The aircraft body in the area of the fuel cell was destroyed in the resulting fire.

A. Bonnell
A. Bonnell

J. Baker
J. Baker

cc: J. Burke
J. Grabber (2)
H. Hockett (2)
R. Lessard
J. Lovell
D. Meadowcroft (2)
R. Peck (2)
W. Rosborough
J. Sweely
L. Gaubis

Document disclosed under the Access to Information Act
Document divulgué en vertu de la Loi sur l'accès à l'information

ATTACHMENT # 1

Form

SHEET #1

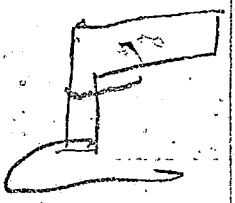

Trees End

Typ Comm Equip Ltd

CM Filter C

Type 453-5-C

Mfg No 2782 - 6-107

Radio ID Plate

100 yds

TR

#4 #2

#3 FB Coax Overhead Panel

Tip down & Bubble

15 in sect of Cover

Pylon TR drive out plate Rip out

35 yds

Jacket in trees

Fit Report Book for Grid

Tip down

5 in sect MR Blade

Document disclosed under the Access to Information Act
Document divulgué en vertu de la Loi sur l'accès à l'information

ATTACHMENT # 1
SHEET

#2

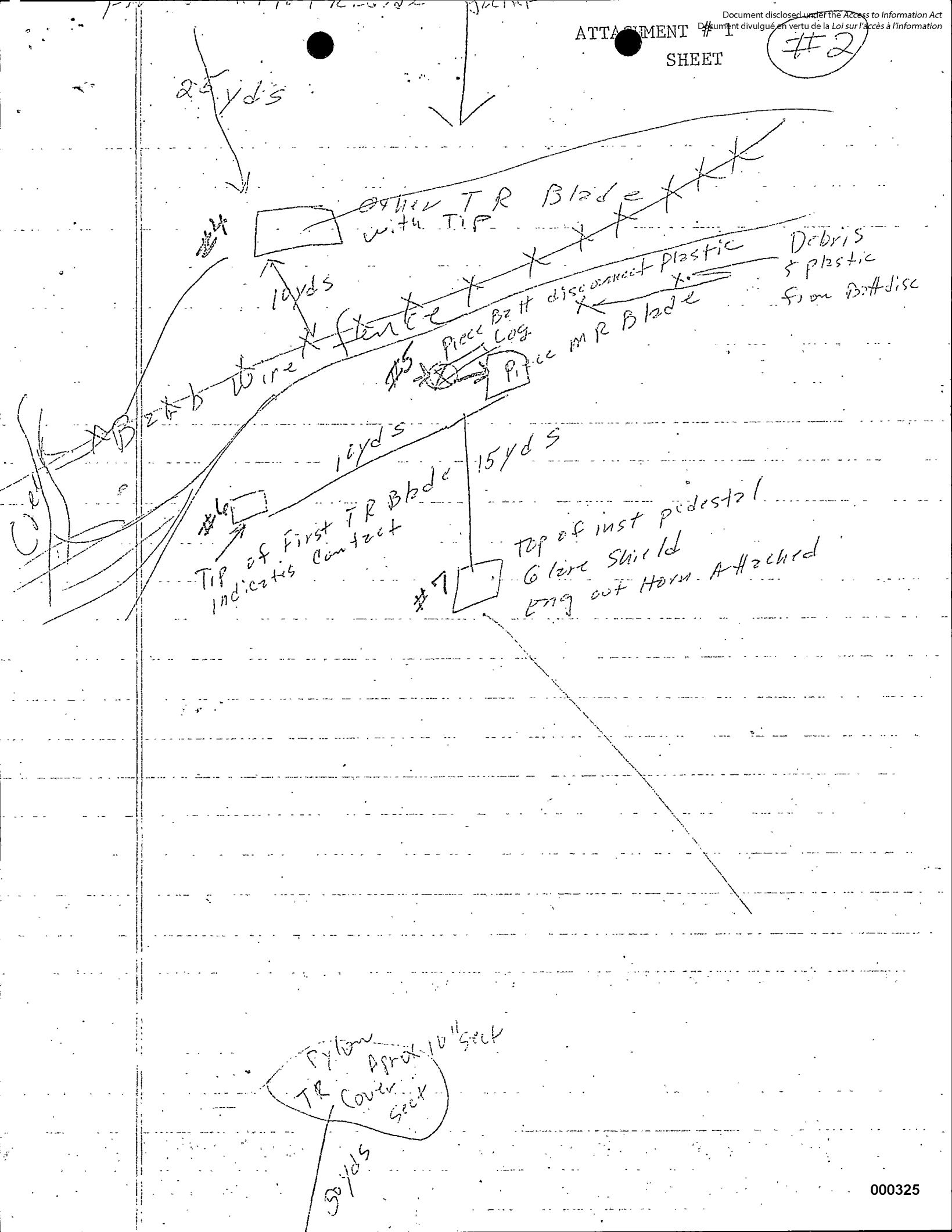

Document disclosed under the Access to Information Act
Document divulgué en vertu de la Loi sur l'accès à l'information

#3

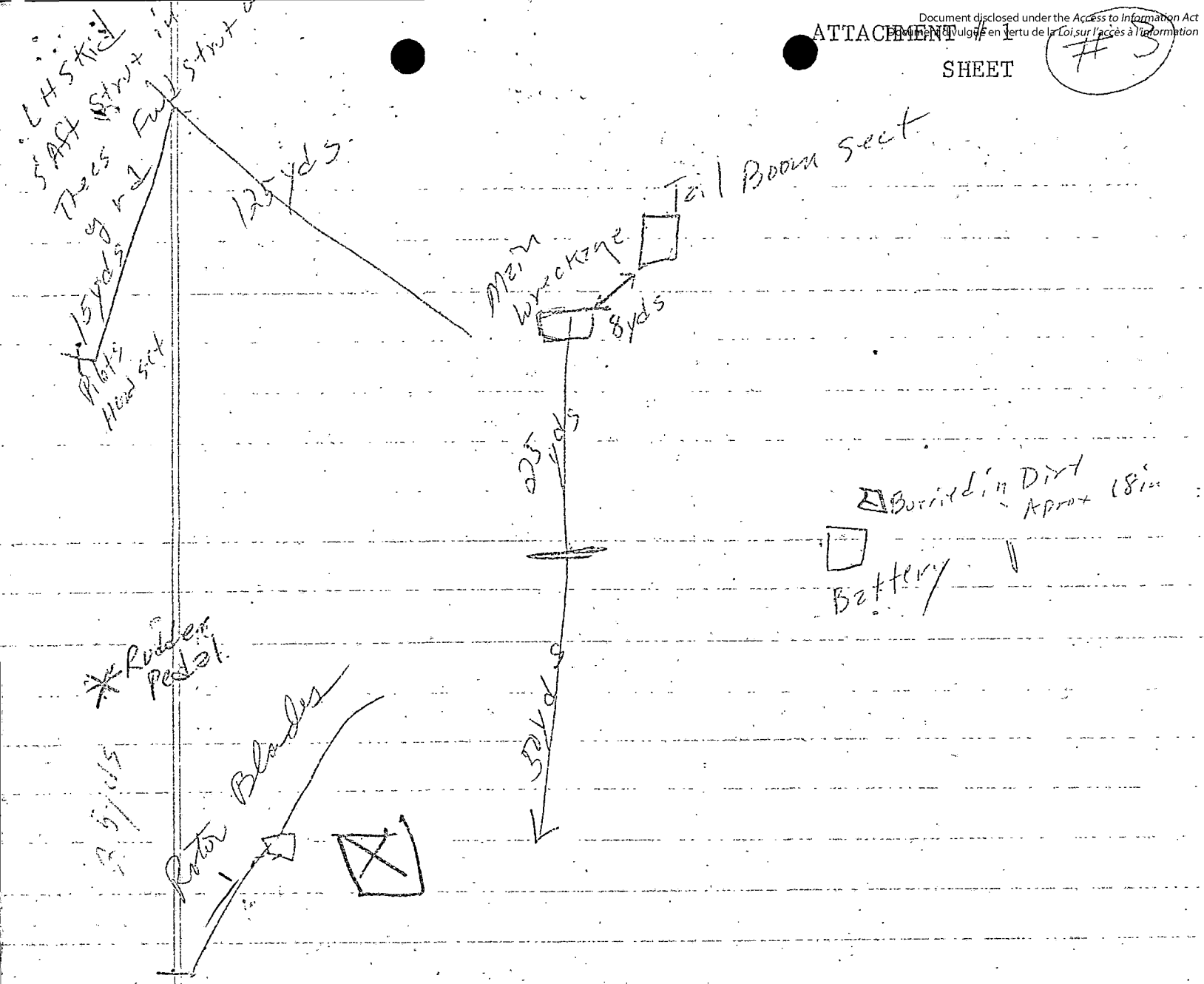

Form

Document disclosed under the Access to Information Act
Document divulgué en vertu de la Loi sur l'accès à l'information

10 copies

APP. 11.

3-17-68

Subject: Field Investigation of Okanagan FH1100 Helicopter Accident near Vancouver, B.C. Mar. 14, 1968

The Accident

What — FH-1100 Helicopter owned and operated by Okanagan Helicopter Ltd. Ship No 96, Canadian Registration No CF-WMO.
Allison 250-C18 Engine S/N 800374
A/C time 40:30
Engine time 40:30

Where — The accident occurred approximately 35 to 40 miles ESE of Vancouver British Columbia, Canada, on about 3 miles east of Langley, and 2 miles north British Columbia.

When — The accident occurred at approximately 11:53 AM Pacific Standard Time on Thursday March 14, 1968. The Helicopter was cruising from Vancouver to Ruby Creek near Hope to replace an S55 Helicopter damaged earlier the same day.

000327

Document disclosed under the Access to Information Act
Document divulgué en vertu de la Loi sur l'accès à l'information

Who - The Pilot, Mr Ian Frederick Fletcher was flying alone and was killed. Mr. Fletcher, 41 had ____ years helicopter experience, ____ hours in turbine, ____ hours in EH1100.

Weather - The weather was cloudy but not raining. Wind was gusty 15 to 25 mph from SE. Temperature about 47°F.

Witnesses - There were several witnesses to the accident. ... Henry [redacted] and [redacted] who were working on a dike approximately 1/4 mile from the accident, gave statements to the news [illegible]. We have not seen their statements as given to the DOT, however, the gist of their observations were as follows:

They heard an explosion and looked up to see the helicopter starting to fall, it moved over and went straight down with a lot of pieces floating in the air. It hit the ground 6 or 7 seconds later followed by another explosion. Since it went into woods on a ridge above their location they would have been unable to observe the actual ground impact. ~~Since the witnesses [illegible] that there was no fire before ground impact the first explosion must be [illegible]~~

s.19(1)

Document disclosed under the *Access to Information Act*
Document divulgué en vertu de la *Loi sur l'accès à l'information*

The Investigation

People involved —

Tom Young - DOT, Vancouver - mech.

Roy Jobling - DOT, Vancouver

Bob Logan - DOT, Ottawa

Gordon Atkins - ch. Engr, Okanagan

Rod Fraser - ch. Insp, Okanagan

Al Bonnet - ch adv. Design, Fairchild-Hiller

Jim Baker - service, Fairchild-Hiller

Len Gambis (Gambis) - ch des. engr. Fairchild-Hiller

Glen Pearson - local service - Fairchild Hiller

Jack Burgess - Serv engr - Standard Aero Engr.

Sparky Penrine - Serv. Rep, Allison

R. Habel - Rel. Engr, Allison

Document disclosed under the *Access to Information Act*
Document divulgué en vertu de la *Loi sur l'accès à l'information*

General Plan - Since the wreckage was scattered over a large area it was necessary to first search the area to locate as many pieces as possible. Each location was marked with yellow ribbon. A survey line was run thru the area of wreckage and the location of each piece was established and plotted by the pieces were then picked up and collected for pickup and transportation to a D.O.T. Ranger for reconstruction.

The main wreckage was dismantled and removed since sections which could be carried out of the woods. The ground was carefully sifted after each piece was removed to get everything possible.

The wreckage was carried out of the woods on May 17 and 18th and transported to a D.O.T. Garage later on the 18th. Cleanup, layout, and identification of wreckage details were started on the 19th.

000330

Document disclosed under the *Access to Information Act*.
Document divulgué en vertu de la *Loi sur l'accès à l'information*

(5)

Wreckage Description

The main wreckage and most of the pieces that came down separately were in a wooded area, most of them were along a path about 400 yds long and 100 yds wide. Some paper was found up to 1 mile away. The distribution of the major items is shown in the attached chart.

Most of the helicopter was found at the main wreckage site. It seems practically straight down and did not first contact by the forward 30" of the RH landing skid which was driven straight into the ground and broken off. After initial impact it went over on its back and the tail boom separated and lay about 20 ft beyond the main wreckage. The tail rotor was severed from the boom at a point 18" above the aft end of the boom and was near the main wreckage. The outer 18" was sheared from both blades. These sections were found back up the wreckage path for the 200 yards. A 1½" section was severed from one blade tip and also found separately.

The main rotor fell intact about 150 yards south of the main wreckage or to the right. The hub separated from the mast adjacent to the stops. The stops had contacted with enough force

Document disclosed under the *Access to Information Act*
Document divulgué en vertu de la *Loi sur l'accès à l'information*

to slightly flatten the blade. The blue blade sustained practically no damage except for a slight negative tuning. The yellow blade sustained several damage in the outer ½ span. Most of the damage occurred at the trailing edge. Evidence found on other parts in the wreckage indicated that a main rotor blade had passed through the front of the bubble and taken off the left landing skid.

A 6 inch piece of 1" dia aluminum tube was found that was bent into a Vee and exhibited grey and black paint smears that matched the grey and black paint used on the top and bottom of the rotor blades. This was part of the horizontal bow inside the bubble and was oriented by an attached bracket to a point about 18" right of center. This indicated that the main rotor entered just to right of the battery, went through the upper part of the console and the left side and tore off the left landing skid.

(Sometime) two feet
The battery went into the ground ~~about two feet~~ about 60 ft to the right and slightly ahead of the main wreckage. The battery cover had knocked off and was discovered loosed.

Document disclosed under the *Access to Information Act*
Document divulgué en vertu de la *Loi sur l'accès à l'information*

(7)

Fire:

Although an explosion was reported preceding the fall of the aircraft there was no evidence that any fire existed prior to ground impact. The tail boom was thrown clear of the main wreckage and was completely free of smoke, soot, or fire damage.

A fire erupted after ground impact which destroyed a good deal of the wreckage ahead of the engine. The engine was also surrounded by fire but sustained little fire damage except for the compressor.

Document disclosed under the *Access to Information Act*
Document divulgué en vertu de la *Loi sur l'accès à l'information*

Engine Condition

The engine lay on its left side in its approximate normal position. It was intact except for a section of the gear box cover containing the fuel pump, spare pad, and output pad. This damage was apparently caused by the vertical impact which jammed the engine against the output shaft. The combustion cans and exhaust collector were partially crushed. Neither N_1 or N_2 could be rotated prior to disassembly but examination thru the compressor inlet and exhaust outlet indicated no evidence of internal failure. The engine mounts failed at the engine but separated at all attachments to the airframe.

Document disclosed under the *Access to Information Act*
Document divulgué en vertu de la *Loi sur l'accès à l'information*

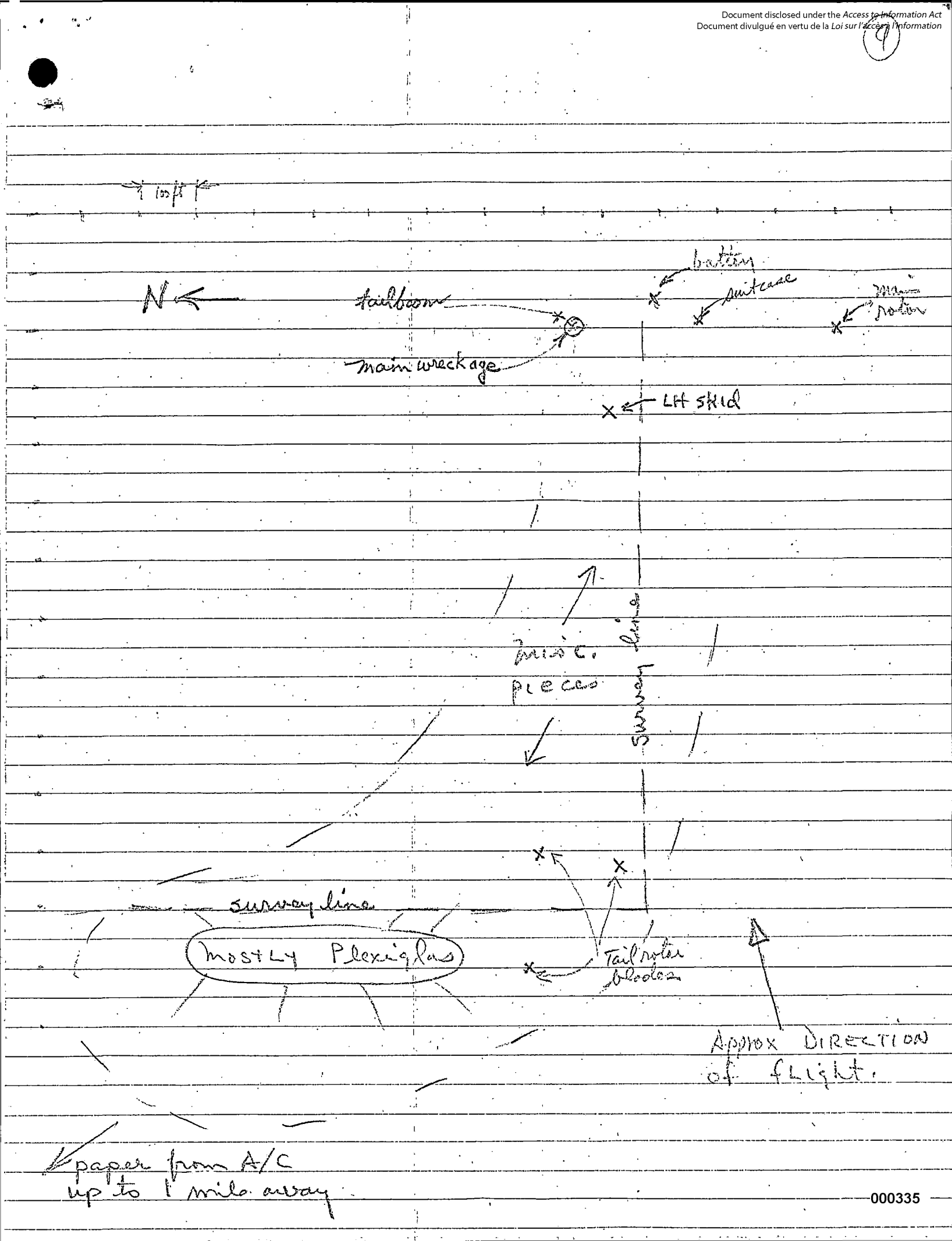

Document disclosed under the *Access to Information Act*
Document divulgué en vertu de la *Loi sur l'accès à l'information*

~~10~~ 6 copies

3-19-68

Subject: Engine examination at D.O.T Facility, Vancouver Airport.

Identification

Engine S/N	CAE 800374
Gearbox	CAG 20374
Turbine	CAT 20055
Compressor	CAC 20412
Fuel Control	199575
Governor	3714
Fuel Pumps	1115
Double Check Valve	989
Fuel Nozzle	AG 811B
Ignitor Plug	2159
Compressor bleed Valve	103-722

Document disclosed under the Access to Information Act
Document divulgué en vertu de la Loi sur l'accès à l'information

Damage Description

Gearbox

- Front case and mounts intact.
- Left hand section of rear cover containing fuel pumps and spare pad broken free but held by tubing.
- Rear output drive paid broken out.
- Bearing exposed. All intact and in normal position except output shaft which is skewed about 5° to 10° due to loss of rear bearing cage support.
- Pinion to torquemeter gear mesh ok.
- Torquemeter gear to output gear mesh damaged. Aft 50% of all torquemeter gear teeth worn or stripped at tip. All output gear teeth visable are run-over at the aft corner of the tip.
- Accessory gear trains appear undamaged.
- Pulled oil filter - clean

Removed rear gearbox cover to examine gear damage more closely.

- Gear damage confined to

Document disclosed under the Access to Information Act
Document divulgué en vertu de la Loi sur l'accès à l'information

output gear / torquemeter gear mesh.

All T.M. gear teeth sheared and/or worn off from aft edge 1/2" x 1/16".

Damage on output gear teeth varies from light to heavy. One segment of 21 teeth damaged at aft end from bare contact, progressively to 1/2" wide in a ccw direction. Two adjacent teeth are worn off 1/16" x 3/4" from fwd. end and have a burnished appearance indicating substantial contact with torquemeter gear. Twelve other teeth are damaged to a lesser degree from the fwd edge.

- Power train bearings OK except for front output shaft bearing which was damaged by impact.

- Oil pump disassembled. A few metal chips present. Appear to be magnesium sheared from pump cover by pump gears.

Document disclosed under the *Access to Information Act*
Document divulgué en vertu de la *Loi sur l'accès à l'information*

Compressor

- Intact and in normal position to engine. Heat damaged and rusted on outside.

- Front support bent inward at left hand anti-ice inlet fitting. Related strut slightly buckled.

- Diffuser intact.

- Compressor bleed valve is 1/4" open and has heavy deposit of mud, dirt, etc on valve face and seat.

- Anti-icing air valve jammed in partially open position.

Removed lower compressor case —

- Found blading intact.

- The plastic lining was in various stages of disintegration due to fire. It was almost completely missing from some areas in the first three stages and deformed and cracked in the fourth and fifth stages. The plastic in the sixth stage was not deteriorated but was darkened to a medium brown color and there was some evidence of light blade tip rub remaining.

- There was a fairly heavy deposit

Document disclosed under the *Access to Information Act*
Document divulgué en vertu de la *Loi sur l'accès à l'information*

of burned plastic on most of the blading. One first-stage blade was slightly curled at trailing edge tip. Additional light F.O.D. may be obscured by the plastic deposit.

Removed compressor from engine for further disassembly to expose the centrifugal stage.

Removed upper case

- Somewhat less heat damage to plastic than noted in lower case.
- Evidence of very heavy blade tip rub about 90° in all stages. About .015" deep in first and second stages. Heaviest rub oriented at 9:00 position (looking fwd). This is in line with impact damage noted on fwd. flange of front support.
- Front bearing turns freely.

Removed compressor rotor assembly from diffuser scroll.

- Heavy rub on face of front diffuser about 180°. Heaviest rub about .015" deep and oriented at 7:30 position (looking forward)
- Rear compressor bearing turns freely.

Document disclosed under the *Access to Information Act*
Document divulgué en vertu de la *Loi sur l'accès à l'information*

Turbine

- The turbine unit is tent downward from its normal position to the engine due to fracture and 1/4" separation at the upper support of the exhaust collector.
- The left exhaust duct is smashed closed. Some observation of the 4th stage turbine blading was obtained through the right duct. Blading appears undamaged.

Removed combustion casing and liner

- Very small deposit of loose dirt or carbon found inside combustion casing. Brownish deposit inside right hand armpit area. Left hand armpit area relatively clean.
- The turbine inlet appears undamaged. No unusual deposits noted.

Removed turbine unit from engine for additional examination.

- N_1 and N_2 coupling shafts intact. Light rub on O.D. of N_1 shaft.
- Gas producer turbine turns freely. Power turbine locked tight.

Document disclosed under the *Access to Information Act*
Document divulgué en vertu de la *Loi sur l'accès à l'information*

Separated gas producer from power turbine.

- No blade damage evident
- Gas producer rotor turns freely. Power turbine rotor still tight. Apparently locked by distortion of exhaust collector.

Removed power turbine rotor from exhaust collector.

- Evidence of 4th stage blade tip knife seal rub through approximate 80° segment. Not certain of orientation.
- All turbine bearings in good condition except #5 (power turbine front) which is contaminated with dirt.

Document disclosed under the *Access to Information Act*
Document divulgué en vertu de la *Loi sur l'accès à l'information*

Miscellaneous Observations

- No fuel found in any lines of fuel system.
- Lower mag plug dirty, sump full of mud.
- Left hand air tube mashed flat and pulled out of diffuser. Right hand tube OK.
- Removed fuel filter - clean, about ½ tsp of clean fuel in bowl.
- Ignition plug has normal deposit. No evidence of recent sparking.
- Fuel nozzle normal.
- Starter - generator shaft sheared.

Document disclosed under the Access to Information Act
Document divulgué en vertu de la Loi sur l'accès à l'information

Summary of Findings

(1) No evidence of engine failure was found. All damage and/or abnormal conditions are associated with impact.

(2) There was evidence of both N_1 and N_2 engine rotation at impact.

N_1 rotation indicated by:

(a) Relatively heavy machining of the plastic lining in the axial compressor stages.

(b) Heavy machining of front diffuser 180° by compressor impeller.

(c) Starter-Generator shaft sheared.

N_2 rotation indicated by:

(a) Severe gear tooth damage at output gear / tachometer gear train.

(b) 4th stage turbine blade tip seal rub.

(3) It is not considered possible to make a reliable estimate of engine speed at impact by

Document disclosed under the *Access to Information Act*
Document divulgué en vertu de la *Loi sur l'accès à l'information*

the physical evidence available. However, it is considered reasonable to conclude that the engine was running at substantial speed as opposed to being in some stage of rundown at the time of impact.

R. W. Hahl

Reliability Engineer
Reliability Department
Allison Division GMC.

Document disclosed under the *Access to Information Act*
Document divulgué en vertu de la *Loi sur l'accès à l'information*

25 Mar 1968

Note: All position references are viewed from the aft end of engine. Engine Examination Report (Hiller FH-1100, CF-WMO)

1.0 Introduction

Allison 250-C18 Engine - Serial No. CAE 800374

1.1 The helicopter crashed and was partly consumed by fire north and east of Langley, B.C. on March 14, 1968.

1.2 The engine appeared relatively intact and in the correct position in the structure when first examined at the accident site. Closer examination showed the following:

1.2.1 The engine mounting pads (side) were attached to the support structure, but the support structure was broken free of the airframe. The engine was held in position by the plumbing, wiring and controls only. The bottom mount pad was broken.

1.2.2 The aft end of the engine to transmission drive shaft was attached, but telescoped and had pushed the power take-off gearshaft aft, fracturing the accessory gearbox aft housing. The torquemeter, power take-off gearshaft and other gears were exposed. The oil cooler fan drive shaft was also still ~~1.2.3~~ attached to the power take-off gearshaft.

1.2.3 Fire, which had consumed a good portion of the helicopter (forward, of and below the firewall) had done some minor damage to the engine, particularly to the compressor section. The plastic liner of this section was seen to be burned at the forward end.

1.2.4 The compressor front support had received a blow and was pushed slightly

Document disclosed under the *Access to Information Act*
Document divulgué en vertu de la *Loi sur l'accès à l'information*

towards its centre at about the 9 o'clock position and the compressor ~~section~~ rotor would not turn. That portion of the ~~compressor~~ turbine section visible through the exhaust air outlet appeared to be undamaged although the left exhaust air outlet had been crushed.

1.2.5 The gas producer fuel control lever was positioned about 1/8" off the full power stop, but the control linkage had been pulled and bent.

1.2.6 The magnetic plugs checked clear on an ohmmeter ohmmeter check. The bottom plug was found to be dirty with non-magnetic particles.

1.3 The engine was removed from the wreckage and was transported to Vancouver on Monday, March 18, 1968.

2.0 Strip Examination

A strip examination was conducted by "Sparky" Penrose, Bob Hatch (Allison Representatives) and Jack Burgess of Standard Aero and was witnessed by Bob Hogan of D.O.T.

2.1 Compressor Section
Serial No. CAC20412

2.1.1 The front support had a strike at 9 o'clock on its front flange and the flange was bent aft to the 10 o'clock position. The aft flange also is bent to the rear at 10 o'clock. The inlet guide vane at the 8 o'clock position is bent, 3/16" from the inboard end at the trailing edge and 1/2" from the inboard end at the leading edge. The inlet guide vane at the 10 o'clock position is slightly bowed. Both vanes are bent in the same direction, i.e. counterclockwise.

Document disclosed under the *Access to Information Act*
Document divulgué en vertu de la *Loi sur l'accès à l'information*

2.1.2 The right hand half of the compressor case has burning, blistering and distortion of the thermo-plastic lining. This is greatest at the first stage and becomes progressively less to the sixth stage where it is heat discolored from deep tan to brown, but not apparently distorted or blistered. A heavy blade rub and cut mark is apparent from 10 o'clock to 4:30 o'clock at the sixth stage. The five stators from 2 o'clock to 4 o'clock in the first stage have contact marks and slight rotational bends on their leading edge ends. There is a heavy ash deposit on the first three stages and on two blades (at about 3:30 o'clock) of the fourth stage.

2.1.3 The left hand half of the compressor case has a bend on the forward flange which matches the aft flange bend on the front support. There is major blistering, distortion and burning of the thermo-plastic lining in the first four stages. This is most severe from 10 o'clock to 11 o'clock. There has been more than normal machining of the thermo-plastic (heaviest about 10 o'clock) on stages 2, 3, 4, 5 and 6. The sixth stage has very minor heat discoloration, but is machined quite deeply.

2.1.4 The compressor rotor assembly has five product on the rotor blades — most pronounced on the first four stages. Number one bearing is good but was not removed since there appears to be crud interfering with release of the split ring. There is a slight clockwise bend (from case contact) on the forward 1/16" of the ends of all 16 first stage blades. There are slight nicks on the leading edges of at least six first stage blades.

Document disclosed under the *Access to Information Act*
Document divulgué en vertu de la *Loi sur l'accès à l'information*

2.1.5 The aft face of the impeller has continuous rub marks around a 1/8" width at the outer periphery. About one inch radially in towards the shaft, another circular rub mark extends completely around the inner periphery of the flat face. Heat discoloration from brown to blue is evident on these marks. The outer labrynth seal knife edges have cuts of metal swarf adhering to their forward edges. The inner labrynth seal knife edges have similar pieces of metal adhering to them.

2.1.6 There are external impact marks on the diffuser scroll with a nick in the aft outer case at about 12:30 o'clock. There is a gouge on the forward side of the outer case about 6 o'clock and an impact rub and dent on the center of the scroll about 6:30 o'clock.

2.1.7 The impeller has machined into the aft face of the front diffuser from about 2 o'clock to 9:30 o'clock, with deepest scoring between 4:30 and 7:30 o'clock.

2.1.8 There rub marks from the impeller aft face on the front face of the rear diffuser. These marks are on the outer periphery of the the plate from about 1:30 to 5 o'clock with a small region of heat discoloration from about 3:00 to 4:00 o'clock. Around the inboard periphery there are rub marks from about 1:00 to 4:30 o'clock. The entire inner mark is heat discolored blue. The forward corner of the labrynth seal is worn over about half the width of the inner face) from about 3 o'clock to 7 o'clock. The oil seal breather tube (the outer portion) is bent aft through about 60° at the clip.

Document disclosed under the Access to Information Act
Document divulgué en vertu de la *Loi sur l'accès à l'information*

2.2 Accessory Gearbox Section
Serial No. CAG-20374.

2.2.1 The power take-off gearshaft was driven to the rear at impact, breaking three pieces out of the gearbox aft case and disrupting the gear train. The largest piece of broken case contained the gas producer idler gearshaft and oil separator. The oil separator gear has seven nicked teeth on the large gear and the forward portion of its shaft is badly chewed and worn next to the gear. This piece also contains the starter generator gearshaft and the adjacent idler gear.

2.2.1.1 The second largest broken piece contains the idler gear adjacent to the last mentioned, the fuel pump gearshaft, the accessory drive gearshaft and the idler between the latter two gears. These last four gears appear to be in good condition.

2.2.1.2 The smallest broken piece was from the aft power take-off gearshaft bearing support and did not contain any gears. The bearing itself had been broken away from the case.

2.2.2 The fuel control gearshaft (which also drives the N_1 tachometer generator) has 23 nicked and broken teeth. The N_1 tachometer generator was broken away from the forward case, 3/4" forward of its mount pad. The power turbine governor gearshaft (which also drives the N_2 tachometer generator) and the adjacent idler gear were undamaged.

Document disclosed under the Access to Information Act
Document divulgué en vertu de la Loi sur l'accès à l'information

2.2.3 The power take-off gearshaft had only one either unmarked or unbroken tooth. The other teeth were either chipped or broken on one or both ends. At one location three adjacent teeth had a concave wear pattern with evidence of overheat (bluing). The torquemeter gear was lying against this position when found.

2.2.4 The output gearshaft bearing in the front case had eleven rollers missing and the inner race was stir round the shaft. The bearing and adjacent case were impact marked and generally chewed up. The aft end of the gearbox to transmission drive shaft was accordioned and splayed out to the front of the output gearshaft. The bearing was on the aft end of the shaft and intact.

2.2.5 The torquemeter outer gear appeared to be in good condition, but its forward rim has rub marks all the way around. The aft portion of all teeth of the small gear were worn and broken off to a depth of about 1/16" and a width of about 1/2". The adjacent forward face of the large wheel has tooth scrape marks and metal smears all the way around. The output gearshaft was found with its teeth resting against this face.

2.2.6 When dismantling the oil pumps it was found that the bottom right attachment screw, although wirelocked, was not tight. The oil pumps, both scavenge and pressure, had a few magnetic and non magnetic metallic/ps in their chambers and on a few teeth. The upper gear of the pressure pump had machined a small amount of metal from the forward face of the aft cover plate. The major cutting extended from 12 o'clock to 6 o'clock, with some from 9 o'clock to 6 o'clock.

Document disclosed under the Access to Information Ac
Document divulgué en vertu de la Loi sur l'accès à l'informatio

2.2.7 Accessories and Miscellaneous

2.2.7.1 The bleed air control valve is open about 3/16" and covered by fire product.

2.2.7.2 The anti-icing valve is stuck in a nearly open position.

2.2.7.3 The ignition exciter is partly soot covered and the case is slightly fire damaged but appears to be in good condition and was not dismantled.

2.2.7.4 The oil filter is clean and wet with oil.

2.2.7.5 The power turbine governor is externally undamaged and was not dismantled.

2.2.7.6 The gas producer fuel control is externally undamaged and was not dismantled.

2.2.7.7 The fuel pump and filter assembly is externally undamaged and the pump was not dismantled. The filter was checked and was clean with about one half teaspoon of fuel in the chamber.

✓ 2.2.7.8 The burner drain valve was in good condition.

2.2.7.9 The spark igniter is internally soot covered, but appears to be in good condition.

2.2.7.10 The fuel nozzle appears to be in good condition.

✓ 2.2.7.11 Both ends of the fuel control accumulator are bent but the double check valve appears to be in good condition.

2.2.7.12 The starter generator was removed and the shaft was found to be sheared.

✓ 2.3 Turbine Section

Serial No. Not yet located.

2.3.1 The forward (number 5) bearing in the exhaust collector support was partially seized, but there were no indications of bearing overheating and the partial seizure appeared to be caused by post-accident dirt in the bearing. The dirt was typical of ground and fire product. The left exhaust outlet was C-000352 (

Document disclosed under the Access to Information Act
Document divulgué en vertu de la Loi sur l'accès à l'information

in and closed, while the right one was somewhat crushed downwards. The fore and aft top case section between the two exhaust outlets is broken off near the front end and the turbine assembly is bent slightly down from its normal configuration.

2.3.2 The right compressor discharge air tube has an impact dent 1/8" forward of the aft end and two compression (accordion type) buckles at the forward end, one 2½" from the forward end (mainly on the outboard side). The other is about ½" from the forward end and concentrated mainly on the inboard side. The left hand tube is crushed over most of its length with the forward end outboard and upward at an angle of about 45°.

2.3.3 On the power turbine rotor assembly, the inner periphery of the ~~first~~ fourth stage nozzle rim is marked quite heavily between 1:30 and 4 o'clock by the fourth stage wheel — the forward corner of the rim. There are no similar marks from the third stage wheel. The assembly was not dismantled because of a lack of suitable tools. The fourth stage nozzle outer ring aft end has left a shiny impression (polished) on the outer rim of the third stage nozzle from about 3 o'clock to 11 o'clock, i.e. from 11 o'clock to 3 o'clock is not shiny. Pieces of metal swarf are adhering to the outer portion of the third stage nozzle blades from 3 o'clock to 8:30 o'clock — mainly on the inner periphery of the rim.

2.3.4 The gas producer turbine turns freely and was not dismantled because of a lack of suitable tools.

Document disclosed under the Access to Information Act
Document divulgué en vertu de la Loi sur l'accès à l'information

2.4 Combustion Section
Outer Case Serial No. 1398. Liner Serial No. BL10012

2.4.1 The left compressor discharge air tube female fitting is bent inboard. (The aft tube was against the forward attachment flange of the outer combustion case). The central and left central portion of the outer combustion case is crumpled downwards, but has made only a small dent in the centre top of the combustion liner, which is otherwise intact.

2.4.2 There is a fair amount of carbon deposited in the aft portion of the combustion liner.

— 11 —

Other Serial Numbers Found

Fuel Pump (Engine)	1116	✓ G.P. Fuel Control	199575
Main Rotor Hub	65	Tail Fin (Vertical)	181
Blue Blade	317		
Yellow Blade	316		
Transmission	1032		
Forward Section of			
✓ G.P. Turbine	BU 158		
Power Turbine No 4			
Nozzle	BL 10182		
Exhaust Output			
Turbine Support	A 589		
Rear Diffuser	DE 01988		
P.T. Governor	3714		
Starter Generator	1316		
Compressor Bleed Valve	103-722		
Double Check Valve	989		
✓ Spark Igniter	2159		
Fuel Nozzle	AC 811B		

Document disclosed under the *Access to Information Act*
Document divulgué en vertu de la *Loi sur l'accès à l'information*

5002-715 (PCAI)

REGISTERED

739 West Hastings Street,
Vancouver 1, B.C.
March 26, 1969

Fairchild Hiller Corporation,
Aircraft Division,
Hagerstown, Maryland.
U. S. A. 21740

ATTENTION: Mr. Reese Joye,
Director of Contracts and Legal.

Dear Sirs:

We have been informed that our requests for Hiller FH-1100 performance data be directed to you. For your information we have attached a copy of our original letter requesting data, and the reasons why we wished to have this data.

A reply to our request was received from Fairchild Hiller, dated June 7, 1968, reference SD-68-5635-JGB, stating that the flight and analytical tests being conducted by Hiller were not yet completed and that we would eventually get a copy of the report. Since receiving this letter we have been in frequent contact with the Fairchild Hiller Field Representative regarding this data and when we might expect to receive same.

It would appear from the information we have now received that our original request has been misplaced. We are, therefore, sending you a copy of our request as indicated above and would appreciate receiving the performance data when it becomes available.

Your co-operation in this matter will be greatly appreciated.

Yours truly,

C. Leyland,
for Regional Superintendent,
Accident Investigation

TY/mim

ENCL

000355

Document disclosed under the Access to Information A
Document divulgué en vertu de la Loi sur l'accès à l'informati

Exhibit 6(A)

Statement of [redacted]

s.19(1)

[redacted]

On March 14, 1968 at approximately 11:30 Larry I was walking on Jackson Road towards the north and about ½ mile south of Dorflinger's farm. I heard a helicopter coming over from the direction of Abbotsford. I looked up and saw the helicopter he appeared to be about 200 feet above ground and flying in a straight line. I could hear the motor running. The helicopter was about even with Jackson road and south of me when I heard a bang and the helicopter started to fall. I did not see anything come off of the helicopter. The helicopter disappeared into the trees and there was a loud crash which shook the ground, and then I saw smoke arising. During this time it was raining but visibility was good.

I did not see any birds around the area when I heard the bang nor did I see any smoke come from the helicopter following the first bang in the air.

When I heard the bang the nose of the helicopter went down and it started to tumble end over end towards the ground

[redacted]

Document disclosed under the *Access to Information Act*
Document divulgué en vertu de la *Loi sur l'accès à l'information*

Appendix 6(b)

s.19(1)

Statement of [redacted]

On the 14th March 1968 at approx 11.50 am I was just going into the house for lunch when I heard what sounded like an helicopter approaching so I turned to look for it and as soon as it come out from behind a large tree I was in good view of it. It was heading in a south easterly direction as though it were coming from Vancouver. It was built about the trees above the bluff. When I was attracted the sound was fairly gusty and the engine noise faded in and out. As I was watching I saw something fly away from the helicopter, this was fairly long and it flashed as though it was a piece of aluminium sunbathed then it continued to fly in the air. The helicopter then came straight down past the trees and it appeared to be in one piece as it entered the top of the trees. I then heard the thump as it crashed and saw a cloud of smoke come up.

The weather at the time was cloudy, there was no rain at that moment and the visibility was good. I would say that the noise of the helicopter was sort of strange.

Before the piece flew off I would say I had the helicopter in site for only a second or two after it came out from behind the large tree in my yard. I saw nothing else in the air at the time in the form of other aircraft or birds.

[redacted]

Document disclosed under the *Access to Information Act*
Document divulgué en vertu de la *Loi sur l'accès à l'information*

Attachment 6(C)

s.19(1)

Statement of [redacted]

On March 14, 1968 at about 11:45 PST I was outside in front of my house when I heard a helicopter and saw it to my [illegible] on top of Jackman hill just north of Doerflinger's house. The helicopter seemed to be going west towards Vancouver at about 75 feet above the tree tops.

The helicopter was making a loud humming noise which they always seem to make as they go into a turn. The helicopter was flying straight and level. Then was a loud short crack and some long object flew off the top of the helicopter. Then the helicopter made a sharp right turn towards the north tilted over on its side and headed down nose first at about an 80 degree angle. The tail assembly was still on as far as I could see. When the tail disappeared behind the trees there was a loud thump. I did not see any smoke rising from the area as it was hidden by the trees.

When the piece flew off of the helicopter I did not see any smoke nor did I see any other pieces fall from the helicopter and I did not hear any other noise except the humming noise described above.

The weather at the time was cloudy, overcast and a steady light wind blowing towards the east when I was located, I do not think that it was raining at the time.

I did not see anything else in the air close to the helicopter at the time.

[redacted]

Document disclosed under the Access to Information Act
Document divulgué en vertu de la Loi sur l'accès à l'information

Appendix 6(D)

s.19(1)

Statement of [redacted]

At around noon on the 14th March 1968 I was attracted in my barn whilst my tractor running when I heard a loud noise outside and I went out and looked up towards the South-West in the direction of the hill. I saw the helicopter heading down into the trees at the top of the hill. It appeared nothing towards the coast at a very sharp angle there were a number of light objects also in the air and appeared to be drifting in a northerly direction as they were falling. I heard a loud thud and an explosion as the aircraft hit the ground and there then was a large puff of smoke.

The weather at the time was cloudy and if it was raining it was not very hard. The wind was not very strong where I was situated I saw no other objects in the form of bird or aircraft in the air at the time.

When I first saw the helicopter I would estimate he was possibly about 100 ft above the top of the trees at the top of the cliff.

[redacted]

Document disclosed under the *Access to Information Act*
Document divulgué en vertu de la *Loi sur l'accès à l'information*

APPENDIX 6 (E)

s.19(1)

Statement of [redacted]

On March 14, 1968 at a little before 12:00 I was with another fellow, sitting on the dyke of the drainage ditch below the bluff and about ¼ mile north of the accident area.

~~I heard a helicopter and then I saw it flying at a~~

~~great distance~~

I heard a helicopter flying and the noise was a normal chopping sound that I have heard before. I was aware of this sound for maybe 30 seconds but I had not looked at the helicopter. Then I heard a sputtering noise as if the motor was not right, this sound was louder than the chopping sound and I could not hear the chopping sound any longer. The sputtering lasted for only a moment and then it stopped also. I looked up and saw a helicopter above the trees on the bluff and to the south of me. The helicopter was horizontal when I first saw it and it immediately tilted front end down. At the same time as I first saw the helicopter tilt there was a lot of small pieces of debris floating or flying around the helicopter. I did not see any large objects falling but there were very small pieces in front of the helicopter and slightly larger objects around the rear both above and below it.

The nose of the helicopter tilted down and the helicopter fell in a very steep nose down angle to the ground. The helicopter went out of sight in the trees and I heard a thud ~~from~~ immediately followed by another noise like lighting gas fumes. I did not see any smoke when the helicopter tilted, during the fall or when it disappeared.

The weather at the time was cloudy, no rain and no wind when I was located. There appeared to be a wind blowing up where the debris was as it was fluttering and drifting towards the north west.

[redacted]

000360

Document disclosed under the *Access to Information Act*
Document divulgué en vertu de la *Loi sur l'accès à l'information*

Appendix 6 (F)

s.19(1)

F

Statement of [redacted]

shortly before noon.

On the 14th March 1968 I was sitting with my friend [redacted] on the south side of the drainage ditch approx ¼ mile north of the Bluff when the accident occurred. While we were sitting there I suddenly heard in helicopters in our general area making an unusual sound like a humming noise, I can't heard this before when helicopters fly near and made a turn. Immediately after this I heard a loud metallic crash I looked around and saw a number of light objects floating around and then I noticed the helicopters hanging in towards the tree tops in a west to east direction, there were no sounds of engines as any time at this time as it was falling. The next thing I heard was a dull thud as it hit the ground. Approx 2 seconds later there was an explosion and I saw a cloud of smoke arise up from the area. I did not see any other flying objects such as birds or other aircraft around the area at the time.

The weather where we were situated was cloudy with no rain or mist.

[redacted]

Document disclosed under the *Access to Information Act*
Document divulgué en vertu de la *Loi sur l'accès à l'information*

s.19(1)

Appendix 6 (G)

[redacted]

I am employed [redacted] at Langley as a flying instructor.

On the 14 of March 1968 information was received that an a/c accident had occured near the Jackson hill and as I was already planning to proced to Abbotsford I was requested to go to that area and investigate.

I left Langley in a PA 28 aircraft about noon with three other people on board and proceeded to the area. A wide circle was made of the area and a column of smoke was noticed in a bush area. Closer investigation showed that an a/c was burning and there were people on the scene.

Weather conditions - at takeoff, the wind at Langley was SSW at approx. 15 + 25 and I would expect the wind at the scene to be at least that. Turbulence in the area was moderate to occasionaly heavy with a broken cloudbase 1500 to 2000 ft above ground. Some shower activity was evident but none at the scene when I arrived.

I informed Abbotsford tower of the accident and by radio and then proceeded to Abbotsford airport and landed.

Approximate flying time from takeoff to sighting the wreckage would be ten or fifteen minutes.

[redacted]

Document disclosed under the Access to Information Act
Document divulgué en vertu de la Loi sur l'accès à l'information

s.19(1)

Appendix 6 (14)

Statement of [redacted]

At approx 12:15 on the 14th March 1968 I took off from Langley airport in Cherokee aircraft CF [redacted] I was situated in the rear seat as a passenger. The purpose of the flight was to fly to Abbotsford airport however prior to take-off the pilot received a request to fly over the accident area for confirmation purposes. At take-off the ceiling was approx 12 to 15 hundred ft. and the wind was in the area of 20 to 25 mph from the south-east and it was quite gusty. The flight over to the area was moderately turbulent with the occasional severe gust which would lift us out of our seats. Over the area all were getting the same condition. The wreckage was still aflame and smoking on our arrival over the area & it would appear that the ambulance had already arrived the attendants were standing beside the wreckage with the stretcher.

[redacted]

s.19(1)

Document disclosed under the *Access to Information Act*
Document divulgué en vertu de la *Loi sur l'accès à l'information*

Affidavit 6 (I)

[redacted]

[redacted] the writer. I am [redacted] in the position of flying instructor at Fort Langley aerodrome. On March 14TH 1968 the writer was informed of a helicopter crash in the Fort Langley area at approx. 11:15 A.M. Prior to receiving this call all float flying had been cancelled at 10.00 A.M. due to gusty prevailing turbulence. A turbulence which had been observed earlier by the writer and 2 myself using the turbulence to advantage from moderate to extreme.

Looking to the east from the float-plane base I could see directly down over Kanaka Lake which is opposite the crash area which appeared to light showers activity on the south side of the river. It was also noted that the winds which I would judge to be blowing from a south, south westerly direction with an approx. wind speed of 15 to 25 M.P.H. which caused ripple from an small saw mill to the float on the river.

The ceiling at that time would be 1500 - 2000'. This particular area where the crash occurred can be depended upon to produce turbulance at any time of the day light showers which is capitalized on by gliders or sailplane pilots during the soaring season. The writer uses the area over the river as a demonstration to all float pilots during their training to be aware of possible turbulence when flying to Harrison Lake.

Flying commenced again at the float plane base at 1600 hrs and light to moderate turbulance was encountered in the vicinity

Document disclosed under the Access to Information Act
Document divulgué en vertu de la Loi sur l'accès à l'information

s.19(1)

Okanagan 6 (J)

Statement of [redacted]

At approximately 11:45 A.M., March 14, 1968 I heard an approaching helicopter. I stepped outside to see who it was and noted it was an FH1100 on a west to east course: The aircraft's track was between our house and 64th Ave (Bose Rd) and paralleling Bose ~~Rd~~ Road at an approximate ~~elevation~~ altitude of 500 feet.

The FH 1100 was red and white in Okanagan Helicopter's paint scheme.

There was some turbulence apparently, as the blades would occasionally make slapping sounds.

The helicopter was moving at a fairly ~~fast~~ good cruising speed as compared to the Taylorcraft and ~~Fleet~~ Fleet Canuck I seen doing training work in our area.

I fly the FH1100 and my speed observations are usually made from the aircraft, thus I would not attempt to estimate his speed as a ground observer. I did admire how quick it was moving particularly in view of an apparent 10-20 m p h ~~head wind~~ South East wind somewhat against his line of flight.

I walked back into the house and observed the FH1100 from our kitchen window until it was out of sight several miles to the East. There was no apparent deviation in its path during the time I watched it.

[redacted]

Document disclosed under the *Access to Information Act*
Document divulgué en vertu de la *Loi sur l'accès à l'information*

DEPARTMENT OF TRANSPORT

MESSAGE FORM

FILE NO. ~~5002-715~~ 5802-12070 1756-1

DATE MARCH 5, 1969 19

COMPLETE THIS SECTION FOR COMMERCIAL MESSAGES ONLY | CHARGE

CCAI, WINNIPEG

PCAI 189 PLS FORWARD SAP PILOT FILE FOR [redacted] PAR FREDERICK RAYMOND FLETCHER FOR PERUSAL BY AIRCRAFT ACCIDENT INVESTIGATION PACIFIC REGION.

PCAI, VANCOUVER

RU/mim

O

38-0014
9-63

FILE COPY

Document disclosed under the *Access to Information Act*
Document divulgué en vertu de la *Loi sur l'accès à l'information*

DEPARTMENT OF TRANSPORT

MESSAGE FORM

FILE NO. 5802-12070 1756-1

DATE MARCH 5, 1969 19

COMPLETE THIS SECTION FOR COMMERCIAL MESSAGES ONLY | CHARGE

WCAI, Edmonton

PCAI 188 PLS FORWARD SAP PILOT FILE FOR PAR FREDERICK RAYMOND FLETCHER FOR PERUSAL BY AIRCRAFT ACCIDENT INVESTIGATION PACIFIC REGION.

P.C.A.I., VANCOUVER

RJ/mim

O

38-0014
9-63

FILE COPY

Document disclosed under the *Access to Information Act*
Document divulgué en vertu de la *Loi sur l'accès à l'information*

MEMORANDUM

CLASSIFICATION

CA1

TO
A

P.C.A.I. Vancouver

YOUR FILE No.
Votre dossier 5002-715(AAV)

6450

OUR FILE No.
Notre dossier 5002-3796(CAIE)

FROM
De

C.A.I. Ottawa

DATE February 19, 1969.

FOLD

SUBJECT
Sujet

Accident - Hiller FH1100, CF-WMO
- March 14, 1968

AIR SERVICES REGISTRY
VANCOUVER
FEB 21 1969
File

1. This is further to our letter dated October 24, 1968. We do not seem to have received a receipted copy of our letter in respect to the pieces of this aircraft which were forwarded in October 1968.

2. Would you please advise if the copy of the letter was returned and if so would you please duplicate.

(A.N. Le Cheminant)
for Chief, Accident Investigation Division.

forwarded
Feb 24/69

000368

Document disclosed under the *Access to Information Act*
Document divulgué en vertu de la *Loi sur l'accès à l'information*

CAI
March 14/68

Document disclosed under the Access to Information Act
Document divulgué en vertu de la Loi sur l'accès à l'information

MEMORANDUM

CLASSIFICATION

TO A: R.S.A.I. PACIFIC

YOUR FILE No. Votre dossier: 5002-715(AAV)

AIR SERVICES REGISTRY
VANCOUVER
OCT 28 1968
File

OUR FILE No. Notre dossier: 5002-3796(CAIE)

FROM De: C.A.I.

DATE: October 22, 1968.

FOLD

SUBJECT Sujet: Accident - Hiller FH-1100, CF-WMO
Engineering Laboratory Report No. 24/68

46955

1. Enclosed please find one copy (Copy No. 2) of the above referenced Engineering Report, for your information and retention. Please acknowledge receipt of this Report on the attached sheet.

for Chief, Accident Investigation Division

Encl.

Receipted Oct 29/68
T. M. G.

CGSB—6GP22a PP&S Cat. No. 3591

AA March 14

Document disclosed under the *Access to Information Act*
Document divulgué en vertu de la *Loi sur l'accès à l'information*

Document disclosed under the *Access to Information Act*
Document divulgué en vertu de la *Loi sur l'accès à l'information*

MEMORANDUM

CLASSIFICATION

TO / A: R.S.A.I. PACIFIC

AIR SERVICES REGISTRY
VANCOUVER
OCT 28 1968
File

YOUR FILE No. / Votre dossier: 5002-715(AAV)

OUR FILE No. / Notre dossier: 5002-3796(CAIE)

FROM / De: C.A.I.

DATE: October 24, 1968.

FOLD

46919

SUBJECT / Sujet: Accident - Hiller FH1100, CF-WMO
[redacted]

1. Portions of wreckage from the above helicopters are being returned under separate cover. It is noted Okanagan has requested return of these items when the investigation is completed.

2. The following items are being returned - Numbers 11, 18b, 35, 47, 59, 96, 97, 104, 106, 109, 125, 153, 161, 184, 185, 187, 201, 203, 206, 217, 239, 249, 261 and 262. In addition, the following unnumbered items are being returned:

i) One small fin spar piece
ii) Three small battery disconnect pieces
iii) One battery cable
iv) Forward piece of tail rotor drive at break
v) Instruments (Refer to lab report 24/68)
vi) Two portions of vertical fin (at break).

3. The following five items were lost in bush and tall grass following their timed drop from a helicopter - items 21, 44, 202, 214 and 247. In addition, the two portions of main rotor mast are being retained temporarily in the hope that further engineering studies can be made pertaining to the dynamics of the fracture.

4. Please acknowledge receipt of the above items on the copy of this letter enclosed with the pieces.

R.M. Logan
for Chief, Accident Investigation Division

Document disclosed under the *Access to Information Act*
Document divulgué en vertu de la *Loi sur l'accès à l'information*

AR-1

MEMORANDUM

CLASSIFICATION

TO
A R.S.A.R.

YOUR FILE No. Votre dossier 5008-WMO
5802-12070

OUR FILE No. Notre dossier ✓5002-715 (AAV)

FROM
De R.S.A.A.

DATE October 22, 1968.

FOLD

SUBJECT
Sujet Accident - Hiller FH-1100, CF-WMO
Approximately 5 Miles East of Fort Langley, B. C.,
March 14, 1968.

1. Herewith are:

Aircraft Journey Log
Aircraft Technical Log
Propeller Log
United States Aircraft Log
United States Engine Log
Weight & Balance Report
Certificate of Registration No.
Certificate of Airworthiness No.



for the subject aircraft.

2. The pilot was killed and the aircraft destroyed. Canadian Log Books and other records were destroyed in the fire which followed the crash.

3. The above documents have served their purpose and may be returned to the owner when your inspection is completed.

P. M. Young
for R.S.A.A.

TY/hr

Attach.

000373

Document disclosed under the Access to Information Act
Document divulgué en vertu de la Loi sur l'accès à l'information

BROUWER & COMPANY

GENERAL INSURANCE ADJUSTERS LTD.

VANCOUVER
J. BROUWER
T. J. HANLY
D. R. MACFARLANE
G. L. CRAIG
J. F. BOREHAM
V. SMITH, P.I.C.
M. [illegible], M.N. AIRCRAFT ENG.
[illegible] MURRAY
[illegible]
[illegible] MURRAY
[illegible] DOCHERTY
[illegible] HOLMES
[illegible] LEECH, APPRAISER
M. C. OSBORNE, OFFICE MGR.

FIRE AND PROPERTY DEPT.
R. A. McDONALD, A.I.I.C. MGR.

NEW WESTMINSTER
J. P. HANBY, A.I.I.C.
H. G. ROBINSON
D. W. ELLIOTT
H. E. COULTER
M. V. CLINGWALL

HOPE
J. A. MacDONALD

KELOWNA
P. J. DAVIDSON
R. L. SAUNDERS

VERNON
M. A. COE

KAMLOOPS
L. A. SOMERS
R. S. RING
G. H. NESBITT

QUESNEL
A. BROWN

PRINCE GEORGE
D. S. McEWAN

TERRACE
P. PRINS

POWELL RIVER
R. B. BOREHAM

NELSON
M. J. ELMES

VICTORIA
G. P. KITSON
R. K. LITTLE
R. E. ROBSON
V. F. DOWNARD

FIRE AND PROPERTY DEPT.
R. J. GARLAND, ASSOCIATE
J. A. BELL

DUNCAN
J. K. BATESON
J. C. SHULTZ
W. L. BOLTON

NANAIMO
H. P. McCALLUM
J. B. GRANT

COURTENAY
F. L. MURRAY

CALGARY
J. P. KLEMP, F.I.I.C.
G. W. BJORNDAHL
N. R. LARDEN
G. HARTLEY

EDMONTON
B. WADDINGHAM
M. O. LEE
G. BOURASSA
B. W. THURBER
R. V. GLOVER

REGINA
C. M. PAGET
D. E. MORTIN

SASKATOON
T. F. QUINN

WINNIPEG
[illegible] W. LANYON
R. K. TURNER

CABLE ADDRESS: "BROUWCO"
TELEPHONE: MUtual 3-2521

MAIN OFFICE
922 ROGERS BUILDING
470 GRANVILLE STREET

VANCOUVER 2, B.C.

AIR SERVICES REGISTRY
VANCOUVER
OCT 8 1968
File 5002-715

October 8, 1968

Our File No. 44021-R

Assistant Deputy Minister, Air
Department of Transport
#3 Temporary Building
Ottawa, Ont.

Attention: Chief, Accident Investigation

Dear Sir:

Re: Okanagan Helicopters Ltd.
Hiller FH-1100 CF-WMO
Accident Date March 4, 1968.

Further to our letter of May 3, 1968 and our conversations with your Mr. le Cheminant during his recent visit to the Edmonton and Vancouver regions.

Since considerable time has passed we would request your advice as to when we may expect to receive copies of your laboratory test report as we earlier requested and the Advance Summary Accident Report.

We would also request your assurance that all parts taken by the Investigators for laboratory testing will be returned to Okanagan Helicopters Ltd. as soon as your Investigation is complete.

Yours very truly

BROUWER & COMPANY

M R McCubbin/BM

M. R. McCubbin
Aircraft Engineer
License VRM 356

MRMc/bm

cc: Department of Transport
Vancouver

Document disclosed under the *Access to Information Act*
Document divulgué en vertu de la *Loi sur l'accès à l'information*

AH
15/3/68

Document disclosed under the *Access to Information Act*
Document divulgué en vertu de la *Loi sur l'accès à l'information*

BROUWER & COMPANY
GENERAL INSURANCE ADJUSTERS LTD.
922-470 GRANVILLE STREET
VANCOUVER 2, B.C.

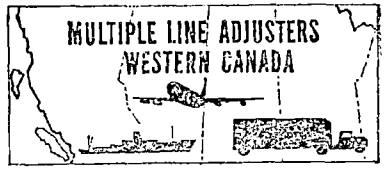

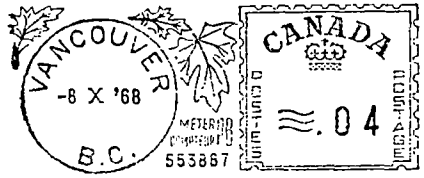

Assistant Deputy Minister, Air
Department of Transport
739 W. Hastings St.

VANCOUVER, B.C.

ATTN: SUPT. ACCIDENT INVESTIGATION

Document disclosed under the *Access to Information Act*
Document divulgué en vertu de la *Loi sur l'accès à l'information*

AA 7m

1968 JUL 2 AM 10:00

5002-715

NNNNZCZC VRA083 1624 244

JJ CYVRRO

021602 CYHQ

RDAS VANCOUVER

CAIE 44 RE YOUR AAV 48 HILLER FH1100 CF DASH WMO NO REQUIREMENT FOR ADDITIONAL PARTS ANTICIPATED STOP ITEMS MAY BE RELEASED TO OWNER STOP A SKETCH SHOWING ORIGINATION OF CANOPY ITEMS WOULD BE USEFUL FOR REFERENCE IF OPPORTUNITY TO MAKE SKETCH CAN BE ARRANGED

DICAV OTTAWA

Document disclosed under the *Access to Information Act*
Document divulgué en vertu de la *Loi sur l'accès à l'information*

AA 7111-4.

1968 JUL 3 AM 8:15

NNNNTSQWIRA073 1404 244

JJ CYVRRO

031233 CYHQ

5002-715

RDAS VANCOUVER

CAIE 44 RE UR AAV 48. HILLER FH1100 CF/WMO. NO REQUIREMENT FOR ADDITIONAL PARTS ANTICIPATED. ITEMS MAY BE RELEASED TO OWNER. A SKETCH SHOWING ORIGINATION OF CANOPY ITEMS WOULD BE USEFUL FOR REFERENCE IF OPPORTUNITY TO MAKE SKETCH CAN BE ARRANGED.

DICAV OTTAWA

000378

Document disclosed under the *Access to Information Act*
Document divulgué en vertu de la *Loi sur l'accès à l'information*

NNNNZCZC VRA153 2218 282

JJ CYVRRO

112106 CYHQ

RDAS VANCOUVER

AA

5002-715

CAIE 17 RE HILLER FH1100 STOP METALLURGICAL EXAMINATION CONFIRMED
MAST FAILED WHILE ROTOR WAS UNDER POWER STOP OVERLOAD FRACTURE
PRIMARILY TENSILE IN NATURE AS A RESULT OF EXCESSIVE ROTOR FLAP
STO HARDNESS TEST GAVE ROCKWELL C OF APPROX 38 STOP NEG
RESULTS FROM INSTRUMENTS EXAMINATION STOP EXAMINATION OF
FIN AND WRECKAGE SCATTER PROGRESSING

DICAV OTTAWA

000379

Document disclosed under the *Access to Information Act*
Document divulgué en vertu de la *Loi sur l'accès à l'information*

NNNN

1968 MAY 9 PM 1:27

FILE NUMBER PLEASE

2002-715

ZCZC VRA117 2021 232

JJ CYVRRO

091956 CYHQ

RDAS VANCOUVER

CAIE30 RE HILLER FH1100 CF/WMO STOP NO OBJECTION RELEASE SCATTER PLOT TO FAIRCHILD HILLER AS REQUESTED YOUR LETTER MAY 2 1968

DICAV OTTAWA

Sent May 15, 1968

F.M.Y.

000380

Document disclosed under the *Access to Information Act*
Document divulgué en vertu de la *Loi sur l'accès à l'information*

1968 MAY 1 AM 11:40

5002-715

NNNNZCZC VRA117 1843 63213

JJ CYVRRO

011828 CYHQ

RDAS VANCOUVER

CAIE 26 HAVE RECEIVED REQUEST FROM FAIRCHILD HILLER FOR FRACTURED MAST PORTION OF S1100 CF/WMO STOP OUR WORK IS COMPLETE ON THESE ITEMS STOP REQUEST YOU ASCERTAIN FROM OKANAGAN IF THEY ARE IN AGREEMENT STOP PLEASE ADVISE

DICAV OTTAWA

Contacted R. G. Askin
Okanagan Helicopters
May 1, 1968
No reply as yet. J. Wy.

000381

Document disclosed under the *Access to Information Act*
Document divulgué en vertu de la *Loi sur l'accès à l'information*

DEPARTMENT OF TRANSPORT

MESSAGE FORM

FILE NO. 5002-715

DATE MAY 3, 1968 19

COMPLETE THIS SECTION FOR COMMERCIAL MESSAGES ONLY | CHARGE

ADMA OTTAWA

CYHQ

ATTN CAIE

AAV 28 REYRTEL CAIE 26 THE PORTION OF FRACTURED MAST IS NOT TO BE RELEASED TO FAIRCHILD HILLER. OKANAGAN AND INSURANCE ADVISE LETTER TO FOLLOW RE PARTS.

for RDAS VR

TY/mim

O

38-0014
9-63

FILE COPY

000382

Document disclosed under the *Access to Information Act*
Document divulgué en vertu de la *Loi sur l'accès à l'information*

DEPARTMENT OF TRANSPORT

MESSAGE FORM

FILE NO. 5002-715

DATE MAY 2, 1968 19

COMPLETE THIS SECTION FOR COMMERCIAL MESSAGES ONLY | CHARGE

ADMA OTTAWA

CYHQ

ATTN CAIE

AAV 27 RE YR CAIE 27 UNABLE TO PROVIDE MORE ACCURATE WIND SPEED AND DIRECTION FOR ACCIDENT LOCATION FROM FACTS AVAILABLE. HOWEVER PILOT REPORTS OBTAINED FOR AREA WITHIN 20 MINS AFTER ACCIDENT WOULD INDICATE WIND SPEED TO BE NEARER 20 TO 25 MPH AND FROM THE SCATTER DIAGRAM THE DIRECTION WOULD APPEAR TO BE 170° m.

[redacted]

for RDAS VR

RJ/mim

38-0014
9-63

FILE COPY

000383

Document disclosed under the *Access to Information Act*
Document divulgué en vertu de la *Loi sur l'accès à l'information*

1969 MAY 2 AM 8:32

AA

5002-715

NNNNZCZC VRA065 1405 284

JJ CYVRRO

021235 CYHQ

RDAS VANCOUVER

CAIE 27 RE HILLER SH1100 CF/WMO. ASSUMING WIND FROM BETWEEN 150 DEG. T. AND 170 DEG T. AT 17 MPH IT APPEARS MAIN ROTOR SEPARATED PRIOR TO TAIL ROTOR. SINCE WIND DIRECTION IS CRITICAL FACTOR IS IT POSSIBLE TO PROVIDE PERTINENT WIND DIRECTION AND SPEED WITH ANY GREATER DEGREE OF ACCURACY.

DICAV OTTAWA

Document disclosed under the *Access to Information Act*
Document divulgué en vertu de la *Loi sur l'accès à l'information*

ADMA, OTTAWA
No. 3 Temporary Bldg.

5002-715 (AAV)

RDAS, VANCOUVER

May 2, 1968

ACCIDENT - Hiller FH 1100, CF-WMO,
Approx.5 miles east of Fort Langley, B.C.
March 14, 1968.

1. We are forwarding one copy of the completed wreckage scatter plot to the Engineering Laboratory for their perusal and retention. Further copies will be submitted with the completed accident report.

2. Please advise if a copy of the scatter plot may be released, to Fairchild Hiller, by this office.

D. M. Young
for Regional Director, Air Services

TI/mim

c.c. Department of Transport,
Accident Investigation Division,
Engineering Laboratory,
Building U 62, N.R.C.,
Uplands, Ottawa, Ontario.
ATTN: R. M. Logan.

000385

BROUWER & COMPANY

GENERAL INSURANCE ADJUSTERS LTD.

VANCOUVER
J. BROUWER
T. J. HANLY
D. R. MACFARLANE
G. L. CRAIG
J. F. BOREHAM
V. SMITH, A.I.I.C.
M. R. McCUBBIN, AIRCRAFT ENG.
G. J. DUNAWAY
J. M. HOEY
D. W. ELLIOTT
G. A. BARCLAY
H. E. COULTER
W. C. HAGGART
D. T. DOUGHTY
G. E. LEECH, APPRAISER
M. C. OSBORNE, OFFICE MGR.

FIRE AND PROPERTY DEPT.
R. A. McDONALD, A.I.I.C., MGR.

NEW WESTMINSTER
B. P. HANBY, A.I.I.C.
J. E. MORLEY
P. J. DAVIDSON
T. A. ROSS, A.I.I.C.
R. E. ROBSON
R. V. GLOVER

HOPE
J. A. MacDONALD

KELOWNA
D. S. McEWAN

VERNON
M. A. COE

KAMLOOPS
L. A. SOMERS
R. S. RING
G. H. NESBITT

QUESNEL
A. BROWN

TERRACE
P. PRINS

PRINCE RUPERT
H. A. UPSON

POWELL RIVER
R. M. KNUDSEN

VICTORIA
G. P. KITSON
A. W. FRASER
R. K. LITTLE
M. G. MOULD

FIRE AND PROPERTY DEPT.
R. J. GARLAND, ASSOCIATE
J. A. BELL

DUNCAN
J. K. BATESON
B. H. McCONNAN

NANAIMO
R. B. BOREHAM
H. P. McCALLUM

COURTENAY
F. L. MURRAY

CALGARY
J. P. KLEMP, F.I.I.C.
G. W. BJORNDAHL
D. E. CARR
W. G. EVANS
G. HARTLEY

EDMONTON
B. WADDINGHAM
M. O. LEE
G. BOURASSA

REGINA
C. M. PAGET
D. E. MORTIN

SASKATOON
T. F. QUINN

WINNIPEG
R. W. LANYON
R. K. TURNER
E. J. JURAS, APPRAISER

CABLE ADDRESS: "BROUWCO"

TELEPHONE: MUTUAL 3-2521

MAIN OFFICE
922 ROGERS BUILDING
470 GRANVILLE STREET

VANCOUVER 2, B. C.

May 3, 1968

Our File No. 44021-R

5002-715

WITHOUT PREJUDICE

Assistant Deputy Minister, Air
Department of Transport
#3 Temporary Building
Ottawa, Ont.

Attention: Chief, Accident Investigation Division

Dear Sirs:

Re: Okanagan Helicopters Ltd.
Hiller FH-1100 Helicopter CF-WMO
Accident date - March 14, 1968

We are the Adjusters appointed by Underwriters to investigate the above captioned accident.

We would refer you to the letter addressed to Mr. Leyland dated March 25, 1968 and signed by R. G. Askin, Superintendant of Maintenance for Okanagan Helicopters Ltd. which pertains to disposition of the parts from this helicopter.

We acknowledge receipt of the request for authority to release parts to Fairchild Hiller which was relayed to us by telephone from your Vancouver office on May 2, 1968. In view of the serious aspect of this accident we must respectfully request that none of the parts be released to anyone other than Okanagan Helicopters Ltd.

We understand that your laboratory tests are now complete and we would request two copies of the laboratory report and one copy of the advanced Summary Accident Report as soon as they become available.

We would have no objection to Fairchild Hiller personnel inspecting the parts which are presently held in your custody however we must request that any inspection carried out by anyone other than yourselves must be under the direct supervision of Accident Investigation Division.

Document disclosed under the *Access to Information Act*
Document divulgué en vertu de la *Loi sur l'accès à l'information*

We trust you will understand the reason why it is necessary for us to make the above request.

Thanking you,

Yours very truly

BROUWER & COMPANY

Per: M. R. McCubbin
Aircraft Engineer
License VRM 367

MRMc/bm

cc: Regional Driector, Air Services
Attn: Supt. Accident Investigation

Okanagan Helicopters Ltd.
Attn: R. G. Askin

Document disclosed under the *Access to Information Act*
Document divulgué en vertu de la *Loi sur l'accès à l'information*

ADMA, OTTAWA
No. 3 Temporary Bldg.

5002-715 (AAV)

RDAS, VANCOUVER

May 30, 1968

ACCIDENT - Hiller FH-1100, CF-WMO

1. Regarding your telex CAIE 34 requesting parts from the above helicopter to complete the breakup analysis, we are sending the following items:

(a) Battery disconnect No's. 44, 70, 95, 109, 153 and 261, and battery cable with connector lug attached.

(b) Right hand rudder pedal No. 21.

(c) Aluminium radio pan No. 47.

(d) Battery vent tube No. 59.

(e) Battery vent tube No. 262.

(f) Clear plexi glass No. 68.

(g) Overhead plexi glass No's. 96 and 161.

(h) Overhead plexi glass, grey, No. 106.

(i) Bubble plexi glass NO's. 184, 185, 187, 208.

(j) Clear plexi glass No. 202.

(k) Clear and grey plexi glass No. 214.

(l) Grey plexi glass No. 217.

(m) Orange and clear plexi glass No. 104.

. . . 2

000388

Document disclosed under the *Access to Information Act*
Document divulgué en vertu de la *Loi sur l'accès à l'information*

2. Please advise as soon as possible if other parts may be required as we shall be releasing the wreckage to the owners in order to vacate the building where the wreckage is now stored.

3. All parts are to be returned to this office for disposal to the owners.

J. M. Young
for Regional Director, Air Services

TY/mim

c.c. Department of Transport,
Accident Investigation Division,
Engineering Laboratory,
Building U 62,
NRC Uplands, Ottawa.

000389

Document disclosed under the *Access to Information Act*
Document divulgué en vertu de la *Loi sur l'accès à l'information*

1968 MAY 24 PM 2:01

NNNNZCZC VRA104 2059 271

JJ CYVRRO

242032 CYHQ

RDAS VANCOUVER

CAIE 34 RE HILLER FA1100 CF DASH WMO. PLEASE FORWARD FOLLOWING ITEMS IF AVAILABLE 1. ALL BATTERY QUICK DISCONNECT ITEMS 2. ITEMS 21 CMA 47 CMA 59 AND 262 3. 10 PIECES ASSORTED SIZES PLEXIGLASS PREFERABLY 68 OR 71 CMA 96 OR 106 CMA 99 OR 104 CMA 100 OR 101 CMA 112 OR 161 CMA 184 CMA 185 OR 190 CMA 186 OR 187 CMA 189 OR 208 CMA 200 OR 202 CMA 214 CMA 217 OR 218. BREAKUP ANALYSIS NEARING COMPLETION BUT THESE ITEMS REQUIRED TO CHECK TERMINAL VELOCITY

DICAV OTTAWA

Document disclosed under the *Access to Information Act*
Document divulgué en vertu de la *Loi sur l'accès à l'information*

DEPARTMENT OF TRANSPORT

MESSAGE FORM

FILE NO. 5002-715

DATE June 21,1968 19

COMPLETE THIS SECTION FOR COMMERCIAL MESSAGES ONLY | CHARGE

ADMA OTTAWA

CYHQ

ATTN CAIE

AAV 48 FURTHER OUR LETTER MAY 30/68 RE ACCIDENT HILLER FH 1100 CF-WMO PLS ADVISE IF FURTHER PARTS OF WRECKAGE REQUIRED AS WRECKAGE BEING RELEASED TO OWNERS.

for RDAS VR

J. M. Young

TY/mim

O

38-0014
9-63

FILE COPY

000391

Document disclosed under the *Access to Information Act*
Document divulgué en vertu de la *Loi sur l'accès à l'information*

COPY TO RDAS VANCOUVER

WMH/JDS

68016124

5002-3796(CAIO)

AIR SERVICES REGISTRY
VANCOUVER
JUN 21 1968
File 5002-715 AA

OTTAWA, Ontario,
June 20, 1968.

Mr. I.E. Tufts,
Solicitor,
Workmen's Compensation Board of B.C.,
707 West 37th Avenue,
Vancouver 13, B.C.

Dear Sir:

This is in reference to your letter of June 13, 1968, concerning the accident to Hiller FH-1100 helicopter, CF-WMO, which occurred near Langley, B.C., on March 14, 1968.

Due to the nature of this accident, an extensive technical investigation is in progress and it is apparent that there will be considerable delay in the production of the approved accident report. Please be assured we will provide you with a copy of the approved report at the earliest possible date.

All we can say at this time is that evidence established the aircraft broke up in flight, crashed and burned.

Yours truly,

Signed by
W. M. Howes,
(for) Chief, Accident Investigation,
Civil Aviation Branch.

cc: RDAS Vancouver

Document disclosed under the *Access to Information Act*
Document divulgué en vertu de la *Loi sur l'accès à l'information*

ROYAL CANADIAN MOUNTED POLICE
GENDARMERIE ROYALE DU CANADA
LANGLEY MUNICIPAL DETACHMENT
R.C.M.P. BOX 280
LANGLEY, B. C.

ON HER MAJESTY'S SERVICE
SERVICE DE SA MAJESTÉ

LANGLEY 6:30 PM 19 III 1968 B.C.

CANADA
POSTAGE PAID
PORT PAYÉ

Regional Director - Air Services,
Dept. of Transport,
739 W. Hastings St.,
VANCOUVER 1, B.C.

ATT'N. ACCIDENT INVEST.

000393

Document disclosed under the *Access to Information Act*
Document divulgué en vertu de la *Loi sur l'accès à l'information*



000394

Document disclosed under the *Access to Information Act*
Document divulgué en vertu de la *Loi sur l'accès à l'information*

#4; Main crash site showing body of pilot.

PROPERTY OF R. C. M. P. — THIS POLICE RECORD IS SUPPLIED TO YOU BY THE R C. M. POLICE FOR INFORMATION OF YOUR DEPARTMENT ONLY. IT IS NOT TO BE MADE KNOWN TO ANY OTHER AGENCY OR PERSON WITHOUT THE WRITTEN PERMISSION OF THE R. C. M. P.

IDENTIFICATION
SECTION
MAR 14 1968
R. C. M. POLICE
NEW WESTMINST

Document disclosed under the *Access to Information Act*
Document divulg[illegible]rmation



000396

Document disclosed under the *Access to Information Act*
Document divulgué en vertu de la *Loi sur l'accès à l'information*

#3; Main crash site looking in a westerly direction.

PROPERTY OF R.C.M.P.—THIS POLICE RECORD IS SUPPLIED TO YOU BY THE R.C.M. POLICE FOR INFORMATION OF YOUR DEPARTMENT ONLY. IT IS NOT TO BE MADE KNOWN TO ANY OTHER AGENCY OR PERSON WITHOUT THE WRITTEN PERMISSION OF THE R.C.M.P.

IDENTIFICATION
SECTION
MAR 14 1968
R.C.M. POLICE
NEW WESTMINSTER

000397

Document disclosed under the *Access to Information Act*
Document divulgué en vertu de la *Loi sur l'accès à l'information*



000398

Document disclosed under the *Access to Information Act*
Document divulgué en vertu de la *Loi sur l'accès à l'information*

#2; Main crash site looking in a southerly direction. Smoke in center background is rising from major portion of wreckage shown in photos' #'s 3 & 4.

PROPERTY OF R.C.M.P. — THIS POLICE RECORD IS SUPPLIED TO YOU BY THE R.C.M. POLICE FOR INFORMATION OF YOUR DEPARTMENT ONLY. IT IS NOT TO BE MADE KNOWN TO ANY OTHER AGENCY OR PERSON WITHOUT THE WRITTEN PERMISSION OF THE R.C.M.P.

IDENTIFICATION
SECTION
MAR 14 1968
R.C.M. POLICE
NEW WESTMIN
000399

Document disclosed under the *Access to Information Act*
Document divulgué en vertu de la *Loi sur l'accès à l'information*



Document disclosed under the *Access to Information Act*
Document divulgué en vertu de la *Loi sur l'accès à l'information*

#1; AIR ~~Aerial~~ view of crash site. Main rotor can be seen at edge of brushland near parked vehicle. Primary crash site is barely visible in upper left background. The gravel portion of Jackman Rd., is visible in the upper right background.

PROPERTY OF R.C.M.P. — THIS POLICE RECORD IS SUPPLIED TO YOU BY THE R.C.M. POLICE FOR INFORMATION OF YOUR DEPARTMENT ONLY. IT IS NOT TO BE MADE KNOWN TO ANY OTHER AGENCY OR PERSON WITHOUT THE WRITTEN PERMISSION OF THE R. C. M. P.

IDENTIFICATION
SECTION
MAR 14 1968
R.C.M. POLICE
NEW WESTMINSTER

Document disclosed under the *Access to Information Act*
Document divulgué en vertu de la *Loi sur l'accès à l'information*

DEPARTMENT OF TRANSPORT

MESSAGE FORM

FILE NO. 5002-715

DATE April 2, 1968 19

COMPLETE THIS SECTION FOR COMMERCIAL MESSAGES ONLY | CHARGE

ADMA OTTAWA

ATTN CAIE

AAV 2 REF YR CAIE 10 COPY OF SCATTER PLAN SUPPLIED MR LOGAN WAS FOR HIS PERSONAL INFORMATION AND WAS NOT THE FINAL PLAN AND THEREFORE DOES NOT CONTAIN ALL NECESSARY CORRECTIONS. OMISSIONS AND ERRORS MENTIONED IN YOUR [redacted] MESSAGE BEING INCORPORATED.

for RDAS VR

RJ/mim

O

38-0014
9-63

FILE COPY

000402

Document disclosed under the *Access to Information Act*
Document divulgué en vertu de la *Loi sur l'accès à l'information*

1968 APR 2 AM 8:24

AA 5002-7/5

NNNNZCZC VRA058 1542 61213

JJ CYVRRO

021449 CYHQ

RDAS VANCOUVER

CAIE 10 RE ACCIDENT HILLER FH/1100 CF/WMO STOP CHECK ERRORS AND OMISSIONS IN SCATTER DRAWING STOP ITEMS 40 AND 246 APPEAR TWICE STOP FOLLOWING ITEMS APPARENTLY MISSING 72 140 142 143 144 145 181 251 AND 264

DICAV OTTAWA

000403

Document disclosed under the *Access to Information Act*
Document divulgué en vertu de la *Loi sur l'accès à l'information*

AIRCRAFT ACCIDENT/INCIDENT REPORTED 13:30 PST MARCH 14,1968
(Time and Date)

COPY FOR: RDAS
RCCA
RSAR
RAI RSAW (2) RSATC (3) RSAP (4)
RCT
R MET

FILES: 5002-715
5008-WMO
5802-12070

ADMA
CYHQ
ATTN: CIG

AAV 195 AIRCRAFT ACCIDENT REPORT

(A) Type, Nationality and Registration marks of A/C	HILLER FH 1100 CF-WMO
(B) Name of Owner, Operator and Hirer, if any, of the A/C	OKANAGAN HELICOPTERS LTD
(C) Name of the Pilot-in-Command	PAR FREDERICK RAYMOND FLETCHER C/O OKANAGAN HELICOPTERS LTD., VANCOUVER, B.C.
(D) Date and time - Standard time of the accident/incident	MARCH 14, 1968 APPROX 11:45 PST
(E) Last point of departure and point of intended landing of A/C	VANCOUVER BC TO RUBY CREEK BC
(F) Position of the A/C with reference to some easily defined geographical point	APPROX 5 MILES EAST FORT LANGLEY, B.C.
(G1) Number of crew killed and number seriously injured	ONE
(G2) Number of passengers killed and number seriously injured	NONE
(H) Nature of the accident/incident and the extent of damage to the aircraft so far as is known. Type of flying Opinion concerning the cause of the accident/incident.	AIRCRAFT DISINTEGRATED IN FLIGHT CRASHED AND BURNED FERRY FLIGHT LEYLAND, YOUNG AND JOSLING INVESTIGATING

for RDAS
VR

AA-2

000404

Document disclosed under the *Access to Information Act*
Document divulgué en vertu de la *Loi sur l'accès à l'information*

AIRCRAFT ACCIDENT/INCIDENT REPORTED 13:30 PST MARCH 14, 1968
(Time and Date)

COPY FOR: ~~RDAS~~
RCCA
RSAR
RAI RSAW RSATC RSAP
RCT
~~R MET~~

FILES: 5002-715
5008-NIL
5802-12070

ADMA
CYHQ
ATTN: CIG

AAV 195 AIRCRAFT ACCIDENT REPORT

(A) Type, Nationality and Registration marks of A/C	HILLER FH 1100 CF-AMO
(B) Name of Owner, Operator and Hirer, if any, of the A/C	OKANAGAN HELICOPTERS LTD
(C) Name of the Pilot-in-Command	PAR FREDERICK RAYMOND FLETCHER C/O OKANAGAN HELICOPTERS LTD., VANCOUVER, B.C.
(D) Date and time - Standard time of the accident/incident	MARCH 14, 1968 APPROX 11:45 PST
(E) Last point of departure and point of intended landing of A/C	VANCOUVER BC TO RUBY CREEK BC
(F) Position of the A/C with reference to some easily defined geographical point	APPROX 5 MILES EAST FORT LANGLEY, B.C.
(G1) Number of crew killed and number seriously injured	ONE
(G2) Number of passengers killed and number seriously injured	NONE
(H) Nature of the accident/incident and the extent of damage to the aircraft so far as is known. Type of flying Opinion concerning the cause of the accident/incident.	AIRCRAFT DISINTEGRATED IN FLIGHT CRASHED AND BURNED FERRY FLIGHT LAYLAND, YOUNG AND JOBLING INVESTIGATING

for RDAS
VR

AA-2

000405

Document disclosed under the Access to Information Act
Document divulgué en vertu de la Loi sur l'accès à l'information

MEMORANDUM

CLASSIFICATION

TO
A

R.D.A.S., Vancouver
Attention: Accident Investigation,
Mr. Young.

YOUR FILE No.
Votre dossier

AIR SERVICES REGISTRY
VANCOUVER
JUL 15 1968
File 5002 - 715

OUR FILE No.
Notre dossier 5002-1 (MEV)

FROM
De O.I.C., Weather Office, Vancouver

DATE
July 12, 1968.

FOLD

SUBJECT
Sujet Aircraft Accident - CF-WMO.

33228

1. Enclosed as requested by phone are four copies of the surface chart for March 14th 1800Z and March 15th 0000Z, together with one copy of the 500mb chart for March 14th 1200Z and March 15th 0000Z.

D. Straker.
Officer-in-Charge,
for Weather Office, Vancouver.

Attachs.

CGSB—6GP22a PP&S Cat. No. 3591

Document disclosed under the *Access to Information Act*
Document divulgué en vertu de la *Loi sur l'accès à l'information*

Document disclosed under the *Access to Information Act*
Document divulgué en vertu de la *Loi sur l'accès à l'information*

OKANAGAN HELICOPTERS LTD.
VANCOUVER AIRPORT, B. C., CANADA
278-5502

March 25, 1968

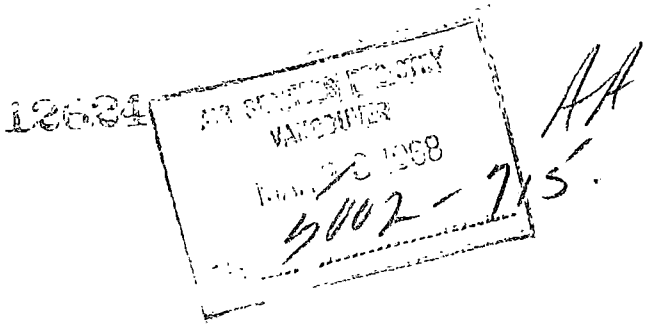

Department of Transport,
Civil Aviation Branch,
739 West Hastings Street,
Vancouver 1, B. C.

Attention: Mr. C. Leyland,
Accident Investigation

Dear Sir:

With reference to accident involving CF-WMO, we would like to go on record at this time to request that should there be any necessity to send any of the damaged parts of this helicopter to any laboratories or facilities for further inspection, this be done under the direct supervision of the Department of Transport personnel. We request that on completion of your investigation all parts of this helicopter be returned to Okanagan Helicopters and that parts are not released to people such as Fairchild Hiller or Allison without prior arrangement between Okanagan Helicopters and concurrence of our insurance adjuster.

We thank you in advance for your co-operation in this regard.

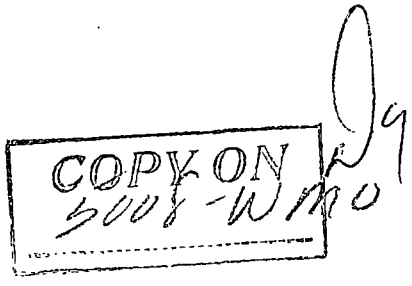

Yours truly,

OKANAGAN HELICOPTERS LTD.

R. G. Askin
Supt., Maintenance

RGA/nlm
cc - Mr. McCubbin,
J. H. Brouwer & Company

Document disclosed under the *Access to Information Act*
Document divulgué en vertu de la *Loi sur l'accès à l'information*

AP
141 3/68

Document disclosed under the *Access to Information Act*
Document divulgué en vertu de la *Loi sur l'accès à l'information*

MEMORANDUM

CLASSIFICATION

TO
A

R.D.A.S., Vancouver
Attention: Accident Investigation

YOUR FILE No.
Votre dossier

OUR FILE No. 5002-1 (MEV)
Notre dossier

AIR SERVICES REGISTRY
VANCOUVER
MAR 21 1968
File 5002-71

DATE March 21,1968.

FROM
De

O.I.C., Weather Office, Vancouver

FOLD

SUBJECT
Sujet

Accident -CF-WMO-March 14,1968.

1. Attached are copies of the forecast, actual weather and an aftercast of weather conditions about the time of the accident to CF-W.M.O. 02911

2. Pireps from aircraft in the vicinity at the time did not reveal anything since the aircraft were flying above the cloud tops at about 13000 feet.

D. Strahan
for Officer-in-Charge,
Weather Office, Vancouver.

Encls.

000410

Document disclosed under the *Access to Information Act*
Document divulgué en vertu de la *Loi sur l'accès à l'information*

AA
14/3/68

Document disclosed under the *Access to Information Act*
Document divulgué en vertu de la *Loi sur l'accès à l'information*

ADMA, OTTAWA
No. 3 Temporary Bldg.

5002-715 (AAV)

RDAS, VANCOUVER

March 28, 1968

ACCIDENT - Hiller FH 1100, CF-WMO
Approximately 5 miles east of Fort Langley, B.C.
March 14, 1968.

1. We are sending parts from the above referenced aircraft which are to be held pending Inspector Logan's return to Ottawa.

2. All the parts removed from CF-WMO and sent to Ottawa are to be returned to this Region Office.

J. M. Young
for Regional Director, Air Services

TY/mim

c.c. D.O.T., Accident Investigation Division,
Engineering Laboratory,
Building U 62,
NRC Uplands, Ottawa.

Document disclosed under the *Access to Information Act*
Document divulgué en vertu de la *Loi sur l'accès à l'information*

AIRCRAFT ACCIDENT/INCIDENT REPORTED 13:30 PST MARCH 14,1968
(Time and Date)

COPY FOR: RDAS
RCCA
RSAR
RAI RSAW RSATC RSAP
RCT
R MET

FILES: 5002-715
5008-[illegible]
5802-12070

ADMA
CYHQ
ATTN: CIG

AAV 195 AIRCRAFT ACCIDENT REPORT

(A) Type, Nationality and Registration marks of A/C	HILLER FH 1100 CF-[illegible]
(B) Name of Owner, Operator and Hirer, if any, of the A/C	OKANAGAN HELICOPTERS LTD
(C) Name of the Pilot-in-Command	PAR FREDERICK RAYMOND FLETCHER C/O OKANAGAN HELICOPTERS LTD., VANCOUVER, B.C.
(D) Date and time - Standard time of the accident/incident	MARCH 14, 1968 APPROX 11:45 PST
(E) Last point of departure and point of intended landing of A/C	VANCOUVER BC TO RUBY CREEK BC
(F) Position of the A/C with reference to some easily defined geographical point	APPROX 5 MILES EAST FORT LANGLEY, B.C.
(G1) Number of crew killed and number seriously injured	ONE
(G2) Number of passengers killed and number seriously injured	NONE
(H) Nature of the accident/incident and the extent of damage to the aircraft so far as is known. Type of flying Opinion concerning the cause of the accident/incident.	AIRCRAFT DISINTEGRATED IN FLIGHT CRASHED AND BURNED FERRY FLIGHT LEYLAND, YOUNG AND JOBLING INVESTIGATING

for RDAS
VR

AA-2

000413